Introduction

This manual describes the functions and usage of the M100 series general vector inverter, including model selection, installation and wiring, parameter setting, running and commissioning, fault diagnosis, etc. Please read this manual carefully before use. Improper use may cause abnormal running, fault, reduced service life of the inverter and even equipment damage, personal injury and death and other accidents.

This manual is provided with the product and should be properly kept and be available to the actual operator for reference.

The company is committed to continuous improving and updating the product, so hardware and software may be upgraded, and the information provided is subject to change without notice.

V1.0
Revised date: September. 2024

Important information

Unpacking inspection

After opening the package, please confirm whether the product and its accessories are damaged during transportation, whether the parts are damaged or loosen, and there should be the inverter, user manual, product certificate and warranty in the package. If any part is missed or damaged, please contact the supplier.

Before unpacking, please confirm:

(1) Whether the outer package is damaged;
(2) Whether the model, specifications on the label are consistent with those in your order.

Safety precautions

The safe running of this product depends on proper installation, operation and maintenance, please carefully read and pay attention to the hints related to safety in this Manual.

- Please use the product after being familiar with the knowledge, safety information and all precautions about Vector Inverter.
- This Manual should be kept by its actual user.
- In this Manual, there are two safety classes, “Danger” and “Warning”, which are marked as follows：

⚠DANGER :It indicates death or severe personal injury if ignored.

⚠WARNING : It indicates death or severe personal injury if ignored.

According to the circumstance, an event at warning class may also cause a serious consequence. Please always abide by the precautions at two classes due to their importance to personal safety.① Scope of application

①Scope of application

⚠WARNING

(1) Not used for machines or systems that may put the operator at risk of life.

(2) Safety devices should be installed if a major accident or loss is expected due to the fault of this product.

② Installation

⚠DANGER

(1) Please install the inverter on a non-combustible object, such as metal, to avoid the risk of fire.

(2) It is strictly prohibited to install this product in the environment which contains combustible or explosive gas; otherwise there is the risk of explosion.

⚠WARNING

(1) Install the inverter firmly on the object that can bear its weight; otherwise, there may be the risk of personal injury or equipment damage.

(2) Do not let metal foreign objects fall into the inverter, or an accident may occur.

(3) Do not install or operate the damaged inverter, or an accident may occur.

③ Wiring

⚠DANGER

(1) Install the circuit breaker that matches the capacity of the inverter at the input side of power supply; otherwise, personal injury or death, equipment damage or other accidents may occur.

(2) The PE terminal of the inverter must be grounded reliably; otherwise, there may be the risk of electric shock or fire.

(3) Tighten the screws at the power input terminal and motor output terminal; otherwise there may be the risk of fire.

(4) Wiring must be carried out by the qualified personnel.

(5) Wiring must be carried out after confirming that the power is off and the power supply charging indicator is off.

⚠WARNING

(1) Always ensure that the input power matches the data at the nameplate, or the inverter may be damaged.

(2) Do not connect the power input wire to the output terminal (U.V.W) of the inverter, or the inverter may be damaged.

④ Operation

⚠DANGER

(1) Do not turn on the power until the inverter cover is covered; otherwise there is the risk of electric shock.

(2) After the inverter is powered on, even if it is in the stop state, do not touch the main circuit terminal of the inverter; otherwise there is the risk of electric shock.

⚠WARNING

(1) Use the " ▽ " key at the keyboard or the external ON / OFF terminal to stop the inverter. Do not directly disconnect the main power supply of the inverter;

⑤ Maintenance

⚠DANGER

(1) The inverter should not be inspected and repaired within 10 min after the charging indicator is off or the inverter is powered off; otherwise, there is the risk of electric shock.

(2) The inverter should be maintained only by trained personnel; otherwise, there is the risk of electric shock or personal injury.

⚠WARNING

(1) Do not leave any conductive material such as metal in the inverter after maintenance; otherwise, the inverter may be damaged.

(2) If the inverter is reused after a long time, it is necessary to charge the internal capacitors of the inverter. Use the voltage regulator to slowly increase the input voltage of the inverter (can not be higher than the rated input voltage of the inverter); otherwise, an accident may occur.

⑥ Disposal

⚠WARNING

(1) When disposal, the product should be treated as industrial waste; otherwise an accident may occur.

Contents

Introduction 1
Important information 2
Unpacking inspection 2
Safety precautions 2
Contents 6
1. Product introduction 7
1.1Model description 8
1.2 Product nameplate description 8
2. Installation and wiring 9
2.1 Installation 10
2.2 Wiring 14
3. Keyboard operating 20
3.1 Keyboard description 21
3.2 Keyboard operation method 22
4. Commissioning 25
4.1 Initial setting of the inverter 26
4.2 Simple commissioning 26
4.3 Open loop vector (SVC) operation 27
5. Function parameter list 29
5.1 Function parameter list 30
5.2 Monitor parameter list 86
6. Fault and diagnosic 88
7. Optional accessories 94
7.1 External keyboard 94
7.2 NEMA Type1 Option 95
Annex Ⅰ Product specifications 96
Annex Ⅱ Technical parameters 99
Annex Ⅲ Installation dimensions 100
Annex Ⅳ Peripherals selection 103
Annex Ⅴ Braking resistor selection 104
Annex VI MODBUS protocol description 106

1. Product introduction

This M100 series Inverter is a dust-proof open-loop vector frequency converter product, mainly used to drive three-phase AC asynchronous motors. The M100 series adopts advanced vector control technology, with large low-frequency output torque, rapid dynamic response, strong overload capacity, modular control components, and rich expansion functions. It is mainly aimed at the domestic market for equipment such as centrifuges, industrial washing machines, wire drawing machines, and the transformation needs of textile, injection molding, chemical fiber, cement, ceramics and other production lines, as well as the large-scale project needs of fans and pumps in industries such as petrochemicals, refining, thermal power, water supply, and heating.

1.1Model description

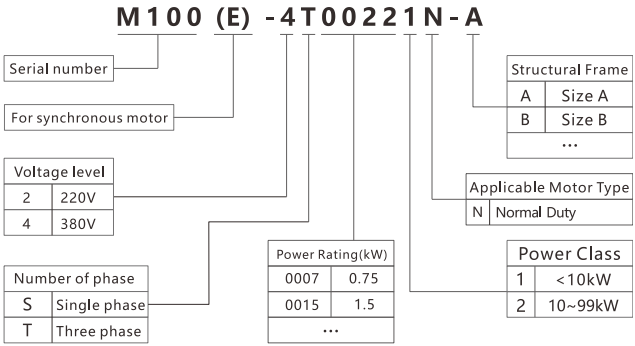

1.2 Product nameplate description

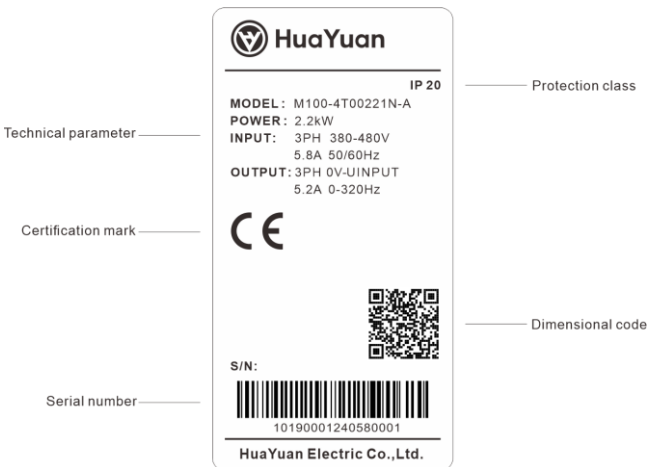

2. Installation and wiring

This chapter describes the correct methods to install and wire M100 series general vector inverter. To ensure the system safety and the normal operation of the inverter, please read this manual carefully before installation. When wiring, always use the wiring method specified in this chapter.

2.1 Installation

① Requirements on installation environment

Ambient temperature range: -10 °C ~ 40 °C. When the ambient temperature is higher than 40 °C, the inverter should be installed at a well-ventilated place. And the rated power should be decreased by 10% every 5 °C by which the ambient temperature increases, and the maximum ambient temperature is 55 °C.

If the inverter is installed at a place with the altitude of above 1000m, please decrease the rated power, the output current capacity decreases 10% every 1000 meters the altitude increases, and the maximum altitude is 3000m.

② Requirements on installation site

※ Avoid the place with high temperature and humidity as far as possible, the humidity should be less than 90%, no condensation and no frost;

※ No drop of water, steam, dust and metal dust;

※ Keep away from flammable, explosive and corrosive gases and liquids;

※ The installation plane should be firm, the vibration acceleration should be less than 5.9mm / s^2 (0.6g);

※ Keep away from electromagnetic interference sources

③Installation space and direction

The inverter is wall-mounted. Requirements on the installation space and distance of single inverter are shown in Figure 2-1. Air deflector is installed at the middle of two inverters which are installed up and down, as shown in Figure 2-2.

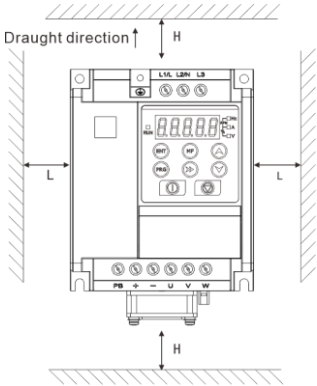

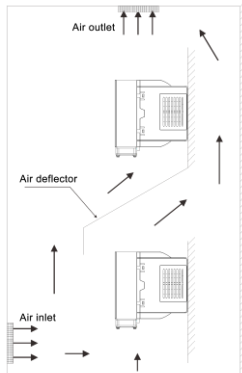

Fig. 2-1 Installation distance Fig. 2-2 Two inverter installed up and down

Power rating	Dimensions	
	L	H
0.4~5.5kW	≥30mm	≥100mm

In case that two inverters are installed left and right, the distance between the inverters should not be less than 20mm, as shown in Figure 2-3.

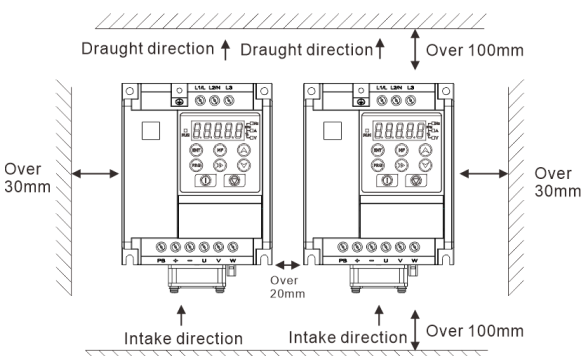

Fig. 2-3 Two inverter installed left and right

⚠WARNING

√ The higher the ambient temperature is, the shorter the service life of the inverter is.

√ If there are heating devices around the inverter, keep away from them as far as possible. In addition, if the inverter is installed in the cabinet, sufficient perpendicularity and space should be taken full account for heat dissipation.

④ Installation method

The inverter is wall-mounted vertically, please refer annex III for hole sizes.

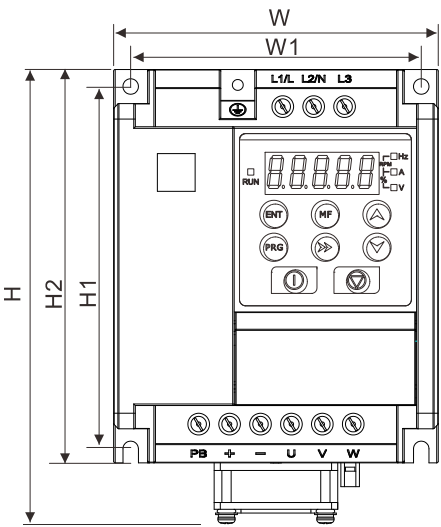

Fig. 2-4 Wall-mounted inverter diagram

⑤Installation instructions for control circuit terminals

Take out two terminals from the accessory bag and connect them. Open the wiring cover on the front of the product, match the characters on the wiring cover with the terminals, confirm the up and down positions of the terminals, and insert them into the

terminal base, as shown in the following figure:

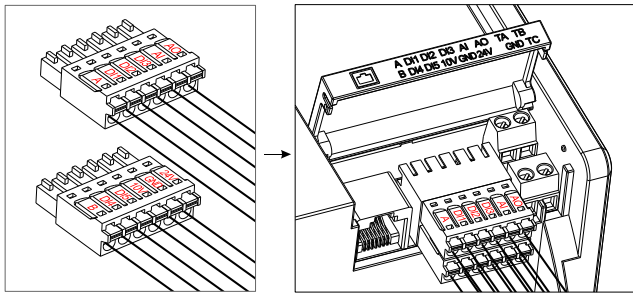

Fig. 2-5 Terminal Installation Diagram

2.2 Wiring

The inverter wiring consists of main circuit and control circuit. After open the cover of the housing, you can see main circuit terminals and control circuit terminals, and then you must wire the inverter as shown in the following diagrams.

①Main circuit wiring

Description of main circuit terminals

Model	Terminal wiring diagram
M100-2S00041N-A M100-2S00071N-A M100-2S00151N-A M100-4T00071N-A M100-4T00151N-A M100-4T00221N-A M100-2T00221N-B M100-4T00401N-B M100-4T00551N-B	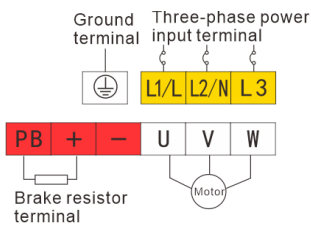

Main circuit terminal symbol description

Terminal symbol	Feature description
L1、L2、L3	Three-phase AC power input terminal of main circuit
U、V、W	Three-phase AC power terminal of motor
+	The positive (+) terminal of DC voltage
-	The negative (-) terminal of DC voltage
PB	Terminals to connect brake resistor between + and PB
⏚	Ground terminal

⚠WARNING

√ There is no phase sequence for the power wiring at the input side of the inverters;

√ Main circuit terminals should be wired with the copper wire recommended in annex IV and in accordance with local regulations and relevant IEC standards.

√ The cable between the inverter and the motor should not be parallel to the power lines (L1, L2, L3) with the distance over 30cm as far as possible;

√ Do not connect other devices to the power supply input terminals of the inverter (L1, L2, L3), it is strictly prohibited to connect the power supply to the output terminals of the inverter (U, V, W), and other capacitors or surge absorbers should not be connected to the output terminals.

√ Non-fuse breaker must be used between the input power and the inverter to prevent failure propagation due to inverter failure, damage to the power distribution unit or a fire;

√ There is no brake resistor in the inverter. In case that the load inertia is large or the inverter is started and stopped frequently, a brake resistor must be installed. If an external brake unit is used, the length of wire should not over 10m and the distance between brake resistors should not over 5m;

√ The ground terminal (PE) of the inverter must be connected reliably. The resistance of the grounding wire must be less than 0.4Ω. Do not use the ground terminal (PE) as the neutral terminal (N);

√ The specifications of the ground wire can be selected according to the following table:

Sectional area of a phase line (S)	**Minimum sectional area of the ground wire (S1)**
S ≤ 16mm²	S
16mm²< S ≤ 35mm²	16mm²
35mm² < S	S/2

√ Yellow-green cable muse be used as the ground wire of the inverter.

②Control circuit wiring

Control circuit terminal description

Control circuit wiring must be separated from main circuit wiring and cannot be placed in the same wire casing.

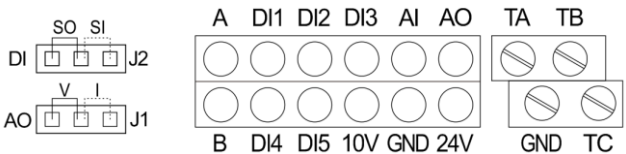

Control terminal symbol description

Category	Terminal symbol	Feature description	Specifications
Control terminal input	DI1	Multi-function digital input terminal 1	For drain (SO), source (SI) selection. When the input is an analog signal, it is low level if it is less than 5V, and it is high level if it is greater than 9.8V. When the input is a digital signal, the high and low logic threshold voltage is 9.8V, and the sampling period is 2ms
	DI2	Multi-function digital input terminal 2	
	DI3	Multi-function digital input terminal 3	
	DI4	Multi-function digital input terminal 4	
	DI5	Multi-function digital input terminal 5	
	TA1 TB1 TC1	Multi-function relay output 1 TA1-TB1, normal closed TA1-TC1, normal open	Contact capacity 250VAC, 3A (cosφ=1), 250VAC, 1A (cosφ=0.4), 30VDC, 3A
Analog input	AI1	Analog input 1	Voltage or current input can be selected throughP05.59 Input range: voltage input 0-10V, current input 0-20 mA Input resistance: voltage input 100kΩ, current input 200 Ω

Category	Terminal symbol	Feature description	Specifications
Analog output	AO1	Analog output 1	Voltage or current output can be selected through Jumper J6 Output voltage: 0-10V Output current: 0-20mA
RS485 communication	A	Positive side of RS485 differential signal	MODBUS RTU communication protocol
	B	Negative side of RS485 differential signal	
Power and ground referenced	10V	+10V power terminal	Output 10V, 20mA, precision 2%
	24V	+24V power terminal	Output 24V, 100mA, precision ±15%
	GND	Ground referenced for control circuit	Ground referenced shared by digital input, analog input and power supply

Jumper terminal description

Jumper category	Feature description	Jumper selection	
		Left	Right
J1	AO1 analog output voltage and current selection	0-10V	0-20mA
J2	Multi-function digital input drain, source selection	Drain input	Source input

⚠WARNING

√0.3 ~ 0.75mm ² wire is recommended for control circuit terminal connection;
√The wire length should not over 30m;
√In order to avoid noise and interference, the shielded wire must be used for control circuit terminal connection and must be separated from main circuit, high voltage circuit;

③ Torque requirements for terminal screws

Inverter main circuit and control circuit terminal torque size can refer to the following sheet

Model	Main circuit terminals torque size (kgf·cm)	Control circuit terminal Torque magnitude (kgf · cm)
M100-2S00041N-A M100-2S00071N-A M100-2S00151N-A M100-4T00071N-A M100-4T00151N-A M100-4T00221N-A	15±10%	15±10%
M100-2S00221N-B M100-4T00401N-B M100-4T00551N-B	15±10%	15±10%

④System wiring diagram

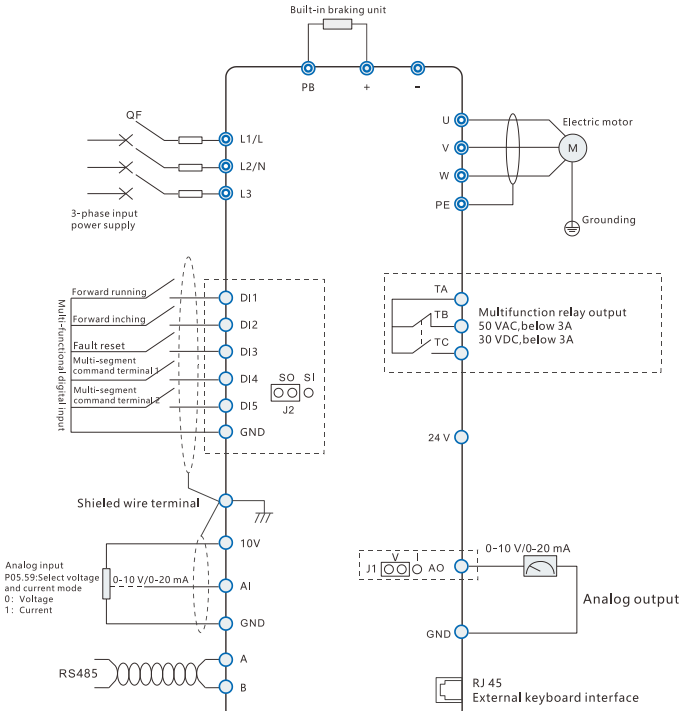

Fig. 2-6 Wiring diagram of M100 series General Vector Inverter

3. Keyboard operating

This chapter describes how to operate the keyboard of M100 series keyboard and its display information. Please read this chapter carefully before operating the inverter.

3.1 Keyboard description

M100 keyboard adopts non-detachable fixed keyboard

Fig. 3-1 Keyboard description

Keyboard function description

Item	Name	Function description
8.8.8.8.8	LED digital tube display	Display output frequency, current, the set value and abnormal value of each parameter
RUN, Hz, RPM, A, %, V	Indicators	Hz: Display the current frequency when it keeps on, the unit is Hz A: Display the current current when it keeps on, the unit is A V: Display the current voltage when it keeps on, the unit is V Hz/A: Display the current rotate speed when it keeps on, the unit is RPM A/V: Display the current percentage when it keeps on, the unit is %
MF	Multi-function key	Multi-function key, used to set invalid, inching or forward and backward running function
PRG	Programming key	Press it to enter or exit the first level menu

3. Keyboard operating

Item	Name	Function description
	OK key	Press it to enter parameter menu and confirm the modified value
	Shift key	Press it to monitor data switch in running state and shift the modified value
	Run key	Keyboard run command key (forward run when it keeps on, stop when it is off and backward run when it flushes
	Stop/reset key	Keyboard stop command key or fault reset
	Increment key	Increase the function code or data
	Decrement key	Decrease the function code or data

3.2 Keyboard operation method

①Query and modify function parameters

The keyboard of M100 eries general inverter uses three levels of menu to set the parameters and monitor the state and other operation, such as function parameter group (the first level menu), function code (the second menus) and parameter setting (the third menu). Please refer to figure 3-2 to query and modify function parameters.

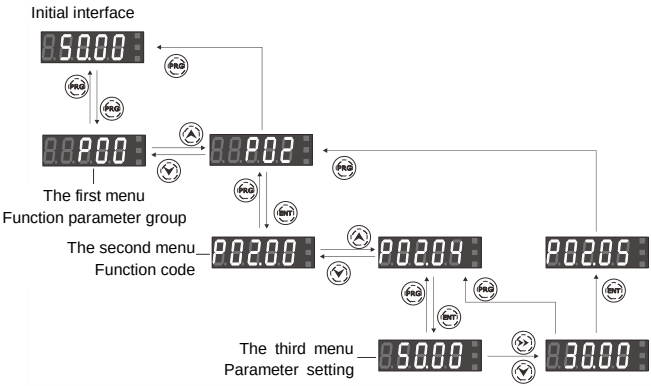

Fig. 3-2 Parameter query and modification flow

Description:

At the third level menu, press “PRG” key or “ENT” key to return to the second level menu. The difference between the two keys is: press “ENT” key to save the current set value, return to the second level menu, and then automatically jump to the next function code; while press “PRG” key to directly return to the second level menu where the current function code is located without saving the current set value.

②upload and download parameters

（1） Upload parameter

This keyboard operation can be used to copy the internal parameters of the inverter to the keyboard memory and save it permanently. So the user can backup his typical parameter settings to the keyboard for emergency use, and the backup parameters do not affect the operation of the inverter.

Set function parameter P07.02=H.#1：Press key “ENT the keyboard, the keyboard starts to read the internal parameters of the inverter. At this time, the LED digital tube displays code “CoPy”. After the parameters are uploaded, the display mode returns to the initial interface “50.00”.

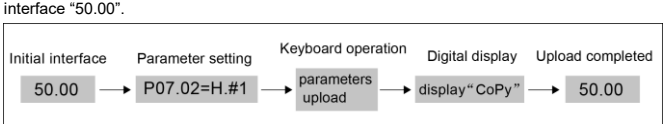

（2）Download parameter

3. Keyboard operating

This keyboard operation can be used to copy the backup parameters to the memory in the inverter. The user can write his typical parameter settings in the keyboard into the inverter without modifying them one by one.

In the Stop mode, set function parameter P07.02 to H.12 or H.13：Press key “ENT ”at the keyboard, the invert starts to download the parameters stored in the keyboard to control panel memory. At this time, the LED digital tube displays code “LoAd”. After the parameters are downloaded, the display mode returns to the initial interface “50.00”.

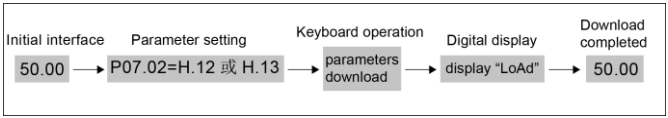

Note: The fixed keyboard on the drive does not support uploading and downloading, and an external keyboard is required.

4. Commissioning

This chapter describes the related operations needed to start the commissioning of M100 series general vector inverter, the initial setting of the common parameter group of the inverter, and the tuning method and steps of the motor parameters during SVC open-loopvectorrunning.

4.1 Initial setting of the inverter

① Control mode selection, P00.00

M100 series inverter has two control modes:V / F control, open-loop vector SVC, Initial value P00.00 = 0, V / F control mode;

② Run command source selection, P00.01

For M100 series inverter, there are three methods to set command source: keyboard control, terminal control, communication control. Initial value P00.01 = 0, the inverter is started and stopped through “ ” and “ ” at the keyboard;

③ Frequency source selection, P00.02, P00.03

For M100 series inverter, parameter P00.07 can be used to select main frequency source or auxiliary frequency source, each frequency source has 9 frequency setting modes. Initial value P00.02 = 0, P00.07 = 00, the frequency is set through selecting “digital setting” of the main frequency source and can be adjusted by “ ” and “ ” at the keypad.

4.2 Simple commissioning

WARNING

It is strictly prohibited to connect the input power cable to the output terminals U, V, W of the inverter.

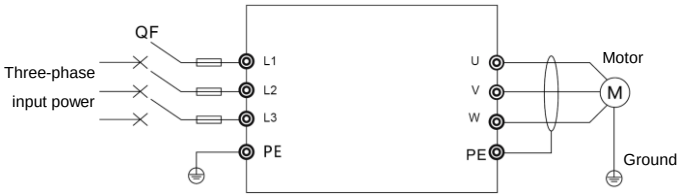

Fig. 4-1 Wiring diagram of commissioning

(1) Before connecting input power supply to the inverter, confirm that the power supply voltage is within the rated input voltage range of the inverter.

(2) Wire according to Figure 4-1;

(3) After confirming that the wiring is correct, the inverter is powered on and displays “H-Y” and then “50.00”.

(4) Control mode selection, P00.00 = 0, V / F control mode;

(5) Command source selection, P00.01 = 0, keyboard control;

(6) Frequency source selection, P00.02 = 0, the keyboard digital setting, and set the preset frequency P00.08 = 0.0;

(7) Press the key “ ” to start the inverter, the inverter output frequency is 0, the keyboard display “0.0”

(8)Press “ ” key to increase the set frequency, the output frequency of inverter increases from “0.0” and the speed of motor increases.

(9)Observe whether the operation of the motor is normal, if not, the inverter should be immediately shut down to remove the cause;

(10)Press “ ” key to decrease the set frequency, and the speed of motor decreases;

(11)Press “ ” key to stop the inverter and cut off the input power.

4.3 Open loop vector (SVC) operation

The entire operation is described with 5.5kW inverter as an example which drives 5.5kW three-phase asynchronous motor. The parameters on the motor nameplate are as follows：

Rated power: 5.5kW	Rated voltage: 380V	Rated rotate speed: 1460r / min
Rated current: 12A	Rated frequency: 50.00Hz	

Digital set frequency and start/stop control of the keyboard

(1)Wire the inverter as shown in Figure 4-1, confirm that the wiring is correct and then switch on.

(2)Set the following parameters in the following order:

P00.00=1	Open loop vector control
P02.01=5.5	Ratedpowerofmotor
P02.02=380	Ratedvoltageofmotor
P02.03=12	Ratedcurrentofmotor
P02.04=50	Ratedfrequencyofmotor
P02.05=1460	Ratedrotatespeedofmotor

(3) Set P00.25 = 1, press "" key, the inverter starts the static tuning of the motor parameters automatically. At this time, the keyboard displays the code "TUNE", and the motor shaft vibrates with obvious squealing. After the keyboard displays "50.00", the static tuning ends.

In case that the motor is disconnected with the load, the inverter can start dynamical tuning. Set P00.25 = 2, the inverter will automatically accelerate to 80% of the rated frequency of the motor after the static tuning ends for a certain time, and then slow down until stop to complete the tuning.

(4)Set preset frequency P00.08, press "" key to start the inverter, observe whether the motor runs normally, if not, stop the inverter immediately, switch off the power and identify the cause and restart it again

(5)During operation, modify the set frequency through the key "" and "" to adjust the rotate speed of motor.

(6)Press ""to stop running and power off.

5. Function parameter list

M100 series general vector inverter includes 20 groups of function parameters by their properties, of which P00-P19 is the basic function parameter, P30 is the monitoring function parameter, which can be used to set and view parameters easily and intuitively. In most applications, the user can set the parameters before operation according to the relevant parameter setting in parameter groups.

The symbols in the Function parameter list are described as follows:

“ △ ”	In shutdown or operation state, the set value of parameter can be changed;
“ ▲ ”	In operation state, the set value of parameter cannot be changed;
“ ● ”	The value of parameter is actually measured value, and cannot be changed;
“ H.”	The set value of parameter is hexadecimal;

5.1 Function parameter list

P00 group, basic functions				
Function code	Name	Setting range	The default value	Chan-ge
P00.00	Control mode of motor 1	0: V/F control 1: open-loop vector control	0	▲
P00.01	Command source selection	0: keyboard command channel 1: terminal command channel 2: communication instruction channel	0	△
P00.02	Main frequency source X selection	0: digital setting (preset frequency P00.08, UP/DOWN can be changed, without power-off function) 1: digital setting (preset frequency P00.08, UP/DOWN can be changed, with power-off function) 2: AI1 4: Multi-segment command 5: Simple PLC 6: PID 7: Communication setting	0	▲
P00.03	Auxiliary frequency source Y selection		0	▲
P00.04	Rang selection of auxiliary frequency source when overlay	0: the maximum frequency 1: frequency source X	0	△
P00.05	Off-set frequency of auxiliary frequency source Y when overlay	0.00Hz ~ the maximum frequency (P00.10)	0.00Hz	△
P00.06	Range of auxiliary frequency source Y when overlay	0% ~ 150%	100%	△
P00.07	Frequency source overlay selection	Units place: frequency source selection 0: main frequency source X	00	△

Function code	Name	Setting range	The default value	Chan-ge
P00.07	Frequency source overlay selection	1: results of main and auxiliary algorithms(operation relation is defined by the decade 2: main frequency source X switches with auxiliary frequency source Y 3: Switch between the main frequency source X and the main and auxiliary calculation results 4: Switch between auxiliary frequency source Y and main and auxiliary calculation results Tens place: main and auxiliary operation relationship of frequency source 0: Main + auxiliary 1: Main–auxiliary 2: The maximum value of both 3: The minimum of both	00	△
P00.08	Preset frequency	0.00Hz ～ the maximum frequency (P00.10)	50.00Hz	△
P00.09	Running direction	0: default direction 1: reverse direction running	0	△
P00.10	The maximum frequency	10.00Hz ～ 320.00Hz	50.00Hz	▲
P00.11	The upper frequency source limit	0: P00.12 setting 1: AI1 3: communication setting	0	▲
P00.12	The upper frequency limit	The lower frequency limit P00.14-the maximum frequency P00.10	50.00Hz	△
P00.13	Off-set of the upper frequency limit	0.00Hz ～ the maximum frequency (P00.10)	0.00Hz	△
P00.14	The lower frequency limit	0.00Hz ～ the upper frequency limit (P00.12)	0.00Hz	△

Function code	Name	Setting range	The default value	Chan-ge
P00.14	The lower frequency limit	0.00Hz ～ the upper frequency limit (P00.12)	0.00Hz	△
P00.15	Carrier frequency	0.5kHz ～ 16kHz	Model set	△
P00.16	Adjustment carrier frequency with temperature	0: no 1: yes	1	△
P00.17	Acceleration time 1	0.0s ～ 6500.0s	Model set	△
P00.18	Deceleration time 1	0.0s ～ 6500.0s	Model set	△
P00.19	High and low speed switch	1: high speed mode (0.0-3200.0Hz) 2: low speed mode (0.0 –320.00Hz)	2	▲
P00.20	Motor selection	0: motor 1 1: motor 2	0	▲
P00.21	Digital set frequency shutdown memory selection	0: no action 1: action	0	△
P00.22	Acceleration time basic frequency	0: the maximum frequency (P00.10) 1: set frequency	0	▲
P00.23	Frequency instruction Up/down basic during operation	0: run frequency 1: set frequency	0	▲
P00.24	Command source bound frequency source selection	Units place: keyboard command frequency source selection 0: not bound 1: digital setting frequency 2: AI1 4: Multi speeds 5: Simple PLC 6: PID	H.000	△

Function code	Name	Setting range	The default value	Chan-ge
P00.24	Command source bound frequency source selection	7: Communication setting Tens place: terminal command channel selection (same as above) Hundreds place: communication command channel selection (same as above)	H.000	△
P00.25	Motor parameter self-learning	0: no action 1: Static tuning of asynchronous motor (learn some motor parameters) 2: Dynamic complete tuning of asynchronous machine (learn all motor parameters) 3: Static complete tuning of asynchronous machine (learn all motor parameters)	0	▲
P00.26	Function recovery	0: no action 1: restore defaults, excluding motor parameters 2: restore defaults, including motor parameters	0	▲

P01 group, start/stop control				
Function code	Name	Setting range	The default value	Chan-ge
P01.00	Start mode	0: direct starting 1: speed track starting 2: pre-excitation starting	0	△
P01.01	Starting frequency	0.00Hz – 10.00Hz	0.00Hz	△
P01.02	Start frequency to keep time	0.0s – 100.0s	0.0s	▲
P01.03	Before starting the DC braking current / pre-excitation current	0% ~ 100%	0%	▲
P01.04	Before starting the DC braking current / pre-excitation current	0.0s ~ 65.000s	0.0s	▲
P01.05	Start protection selection	0: no action 1: action	1	△
P01.06	Rotate speed track	0: software track 1: hardware speed tracking Note: 30.0KW (inclusive) and above models have hardware speed tracking function	Model set	▲
P01.07	Rotate speed track delay time	1-100	20	△
P01.08	Acceleration and deceleration mode	0: linear acceleration and deceleration 1: sigmoid curve acceleration and deceleration A 2: sigmoid curve acceleration and deceleration B	0	▲
P01.09	Proportion of sigmoid curve start time	0.0% ~ (100.0%-P01.10)	30.0%	▲
P01.10	Proportion of sigmoid curve end time	0.0% ~ (100.0%-P01.09)	30.0%	▲

Function code	Name	Setting range	The default value	Change
P01.11	Stop mode	0: deceleration 1: free parking	0	△
P01.12	Stop DC braking starting frequency	0.00Hz – the maximum frequency	0.00Hz	△
P01.13	Stop DC braking wait time	0.0s ~ 100.0s	0.0s	△
P01.14	Stop DC braking current	0% ~ 100%	0%	△
P01.15	Stop DC braking time	0.0s ~ 100.0s	0.0s	△
P01.16	Start Mode- the given is lower than the start frequency	0：Not start 1：Zero frequency Start 2：Given frequency Start 3：Start frequency Start	0	▲
P01.17	Rotation speed tracking waiting time	0.0s～600.0s	Model set	△
P01.18	Rotation speed tracking excitation intensity	0～8	6	△
P01.19	Rotation speed tracking rising frequency	0.00 Hz～50.00 Hz	10.00 Hz	△
P01.20	Rotation speed tracking Excitation time	0.025s～5.000s	0.150s	▲
P01.21	Rotation speed tracking Overload warning coefficient	0.0%～100.0%	50.0%	△

P02 group, motor 1 parameters				
Function code	Name	Setting range	The default value	Chan-ge
P02.00	Motor type selection	0: common asynchronous motor 1: variable frequency asynchronous motor	0	▲
P02.01	Motor rated power	0.1kW ~ 1000.0kW	Model set	▲
P02.02	Motor rated voltage	1V ~ 2000V	Model set	▲
P02.03	Motor rated current	0.01A ~ 650.00A (Inverter frequency ≤55kW) 0.1A ~ 6500.0A (Inverter frequency >55kW)	Model set	▲
P02.04	motor rated frequency	0.01Hz- the maximum frequency	Model set	▲
P02.05	Motor rated rotate speed	1rpm ~ 65000rpm	Model set	▲
P02.06	Stator resistance of asynchronous motor	0.001Ω ~ 65.000Ω (Inverter frequency ≤55kW) 0.0001Ω ~ 6.5000Ω (Inverter frequency >55kW)	Tuning parameter	▲
P02.07	Rotor resistance of asynchronous motor	0.001Ω ~ 65.000Ω (Inverter frequency ≤55kW) 0.0001Ω ~ 6.5000Ω (Inverter frequency >55kW)	Tuning parameter	▲
P02.08	Drain inductance of asynchronous motor	0.01mH ~ 650.00mH (Inverter frequency ≤55kW) 0.001mH ~ 65.00mH (Inverter frequency >55kW)	Tuning parameter	▲
P02.09	Mutual inductance of asynchronous motor	0.1mH ~ 6500.0mH (Inverter frequency ≤55kW) 0.01mH ~ 650.00mH (Inverter frequency >55kW)	Tuning parameter	▲
P02.10	No-load current of asynchronous motor	0.01A ~ P02.03 (Inverter frequency ≤55kW) 0.1A ~ P02.03 (Inverter frequency >55kW)	Tuning parameter	▲

P03 group, motor 1 vector control parameters				
Function code	Name	Setting range	The default value	Chan-ge
P03.00	Velocity loop proportional gain 1	1 ~ 100	30	△
P03.01	Velocity loop integral time 1	0.01s ~ 10.00s	1.00s	△
P03.02	Switch frequency 1	0.00 ~ P03.05	5.00Hz	△
P03.03	Velocity loop proportional gain 2	1 ~ 100	30	△
P03.04	Velocity loop integral time 2	0.01s ~ 10.00s	1.00s	△
P03.05	Switch frequency 2	P03.02– the maximum frequency(P00.10)	10.00Hz	△
P03.06	VC slip compensation coefficient	50% ~ 200%	100%	△
P03.07	Velocity loop filter time constant	0.000s ~ 0.031s	0.000s	△
P03.09	Velocity control torque upper limit source	0: function code P03.10 setting 1: AI1 3:communication setting (Full range of item 1-3 corresponds to P03.10)	0	△
P03.10	Velocity control torque upper limit digital setting	0.0% ~ 200.0%	150.0%	△
P03.11	Excitation regulation proportional gain	0 ~ 60000	2000	△
P03.12	Excitation regulation integral gain	0 ~ 60000	1300	△
P03.13	Torque regulation proportional gain	0 ~ 60000	2000	△

5. Function parameter list

Function code	Name	Setting range	The default value	Chan-ge
P03.14	Torque regulation integral gain	0 ~ 60000	1300	△
P03.15	Velocity loop integral property	0: invalid, 1:valid	0	△
P03.19	Velocity/torque control mode selection	0: velocity control 1: torque control	0	▲
P03.20	Torque setting source selection under torque control	0: digital setting 1 (P03.21) 1: AI1 3: Communication setting 7. Reserved (Full range of item 1-3 corresponds to P03.21digital setting)	0	▲
P03.21	Torque digital setting under torque control	-200.0%-200.0%	0.0%	△
P03.22	Maximum forward frequency under torque control	0.00Hz ~ the maximum frequency	50.00Hz	△
P03.23	Maximum reverse frequency under torque control	0.00Hz ~ the maximum frequency	50.00Hz	△
P03.24	Torque control acceleration time	0.00s ~ 650.00s	0.00s	△
P03.25	Torque control deceleration time	0.00s ~ 650.00s	0.00s	△
P03.26	Amplitude of Vector display frequency resolution	0.00Hz～10.00Hz	0.80Hz	△
P03.27	Selection of vector operation frequency	0: actual frequency 1:Ramps Frequency	0	△

P04 group, V/F control parameters				
Function code	Name	Setting range	The default value	Chan-ge
P04.00	V/F curve setting	0: linear V/F 1: multipoint V/F 2: square V/F 3:1.2 power V/F 4: 1.4 power V/F 5: 1.6 power V/F 6: 1.8 power V/F 7: V/F complete split pattern 8: V/F semi-split pattern	0	▲
P04.01	Torque increase	0.00%: (Automatic Torque Boost) 0.1% ~ 30.0%	Model set	△
P04.02	Torque increase cut-off frequency	0.00Hz- the maximum frequency	25.00Hz	▲
P04.03	Multipoint V/F frequency 1	0.00Hz ~ P04.05	0.00Hz	▲
P04.04	Multipoint V/F voltage 1	0.0% ~ 100.0%	0.0%	▲
P04.05	Multipoint V/F frequency 2	P04.03 ~ P04.07	0.00Hz	▲
P04.06	Multipoint V/F voltage 2	0.0% ~ 100.0%	0.0%	▲
P04.07	Multipoint V/F frequency 3	P04.05 ~ motor rated frequency (P02.04)	0.00Hz	▲
P04.08	Multipoint V/F voltage 3	0.0% ~ 100.0%	0.0%	▲
P04.09	V/F slip compensation gain	0.0% ~ 200.0%	0.0%	△
P04.10	V/F overexcitation gain	0 ~ 200	64	△
P04.11	V/F oscillation suppression gain	0 ~ 100	Model set	△

5. Function parameter list

Function code	Name	Setting range	The default value	Chan-ge
P04.12	V/F split voltage source	0: digital setting (P04.13) 1: AI1 3: Multi speeds 4: Simple PLC 5: PID 6: Communication setting 8. Reserved Note: 100.0% corresponds to motor rated voltage	0	△
P04.13	V/F split voltage source digital setting	0V ~ motor rated voltage	0V	△
P04.14	V/F split voltage increase time	0.0s ~ 1000.0s Note: the time during which the voltage increases from 0V to motor rated voltage	0.0s	△
P04.15	Voltage fall time of V/F separation	0.0s～1000.0s Note: indicates the time when the rated voltage of the motor changes to 0	0.0s	△
P04.17	V/F Limit voltage and current mode	Ones place extreme mode setting Tens place extreme mode setting 0: Not optimize 1: optimize mode 1 2: optimize mode 2	11	▲
P04.18	V/F Current limit proportional gain	0~500	100	△
P04.19	V/F Current limit integral gain	0~100	10	△
P04.20	V/F Rise deviation of voltage limit bus	0~100.0V	50.0V	△
P04.21	V/F Voltage Limit proportional gain	0~1000	300	△
P04.22	V/F Voltage limit integral gain	-300~300	0	△

P05 group, input terminal function				
Function code	Name	Setting range	The default value	Chan-ge
P05.00	DI1 terminal feature selection	0: no function 1: run forward FWD or run command 2: run reverse REV or forward and reverse direction (note: when 1, 2 is selected, P05.08 should be used, see function code parameter description for details) 3: triple-run control 4: forward inch (FJOG) 5: reverse inch (RJOG) 6: terminal UP 7: terminal DOWN 8: free parking 9: fault reset (RESET 10: Operation suspension 11: normally open external fault input 12: multi speed terminal 1 13: multi speed terminal 2 14: multi speed terminal 3 15: multi speed terminal 4 16: acceleration and deceleration time selection terminal 1 17: acceleration and deceleration time selection terminal 2 18: frequency source switch 19: UP/DOWN setting clear (terminal, keyboard) 20: control command switch terminal 1 21: acceleration and deceleration prohibition	1	▲
P05.01	DI2 terminal feature selection		4	▲

Function code	Name	Setting range	The default value	Chan-ge
P05.02	DI3 terminal feature selection	22: PID suspension 23: PLC state reset 24: swing frequency pause 25: torque control prohibition 26: immediately DC braking 27: normal close external fault input 28: enabled frequency modify 29: reverse PID action direction 30: external parking terminal 1 31: control command switch terminal 2 32: PID integral suspension 33: frequency source X switches with preset frequency 34: frequency source Y switches with preset frequency 35: motor selection terminal 36: PID parameter switch 37: user customized fault 1 38: user customized fault 2 39: velocity control / torque control switch 40: emergency parking 41: external parking terminal 2 42: deceleration DC braking 43: running time clear 44: double-/ triple-run switch 45：Counter reset 46：Length reset	9	▲
P05.03	DI4 terminal feature selection		12	▲
P05.04	DI5 terminal feature selection		13	▲
P05.07	DI filter time	0.000s ~ 1.000s	0.020s	▲
P05.08	Terminal command mode	0: two-wire 1 1: two-wire 2 2: three-wire 1 3: three-wire 2	0	▲

Function code	Name	Setting range	The default value	Chan-ge
P05.09	Terminal UP/DOWN rate of change	0.001Hz/s ~ 65.535Hz/s	1.00Hz/s	△
P05.10	DI1 delay time	0.0s ~ 3600.0s	0.0s	▲
P05.11	DI2 delay time	0.0s ~ 3600.0s	0.0s	▲
P05.12	DI3 delay time	0.0s ~ 3600.0s	0.0s	▲
P05.13	Valid mode selection 1 for DI terminal	0: valid high level 1: valid lower level Units digital: DI1 Tens digital: DI2 Hundreds digital: DI3 Thousands digital: DI4 Ten thousands digital: DI5	00000	▲
P05.15	AI curve selection	Units digital: AI1 curve selection 1: curve 1 (2 points, see P05.16-P05.19) 2: curve 2 (2 points, see P05.20-P05.23) 3: curve 3 (2 points, see P05.24-P05.27) 4: curve 4 (4 points, see P05.28-P05.35) 5: curve 5 (4 points, see P05.36-P05.43)	H.01	△
P05.16	AI curve 1 minimum input	0.00V ~ P05.18	0.00V	△
P05.17	Set value corresponding to AI curve 1 minimum input	-100.0% ~ +100.0%	0.0%	△
P05.18	AI curve 1 maximum input	P05.16 ~ +10.00V	10.00V	△

Function code	Name	Setting range	The default value	Chan-ge
P05.19	Set value corresponding to AI curve 1 maximum input	-100.0% ~ +100.0%	100.0%	△
P05.20	AI curve 2 minimum input	0.00V ~ P05.22	0.00V	△
P05.21	Set value corresponding to AI curve 2 minimum input	-100.0% ~ +100.0%	0.0%	△
P05.22	AI curve 2 maximum input	P05.20 ~ +10.00V	10.00V	△
P05.23	Set value corresponding to AI curve 2 maximum input	-100.0% ~ +100.0%	100.0%	△
P05.24	AI curve 3 minimum input	0V ~ P05.26	0.00V	△
P05.25	Set value corresponding to AI curve 3 minimum input	-100.0% ~ +100.0%	0.0%	△
P05.26	AI curve 3 maximum input	P05.24 ~ +10.00V	10.00V	△
P05.27	Set value corresponding to AI curve 3 maximum input	-100.0% ~ +100.0%	100.0%	△
P05.28	AI curve 4 minimum input	0V ~ P05.30	0.00V	△
P05.29	Set value corresponding to AI curve 4 minimum input	-100.0% ~ +100.0%	0.0%	△
P05.30	AI curve 4 inflection point 1 input	P05.28 ~ P05.32	3.00V	△

Function code	Name	Setting range	The default value	Chan-ge
P05.31	Set value corresponding to AI curve 4 inflection point 1 input	-100.0% ~ +100.0%	30.0%	△
P05.32	AI curve 4 inflection point 2 input	P05.30 ~ P05.34	6.00V	△
P05.33	Set value corresponding to AI curve 4 inflection point 2 input	-100.0% ~ +100.0%	60.0%	△
P05.34	AI curve 4 maximum input	P05.32 ~ +10.00V	10.00V	△
P05.35	Set value corresponding to AI curve 4 maximum input	-100.0% ~ +100.0%	100.0%	△
P05.36	AI curve 5 minimum input	0.00V ~ P05.38	0.00V	△
P05.37	Set value corresponding to AI curve 5 minimum input	-100.0% ~ +100.0%	0.0%	△

Function code	Name	Setting range	The default value	Chan-ge
P05.38	AI curve 5 inflection point 1 input	P05.36 ~ P05.40	3.00V	△
P05.39	Set value corresponding to AI curve 5 inflection point 1 input	-100.0% ~ +100.0%	30.0%	△
P05.40	AI curve 5 inflection point 2 input	P05.38 ~ P05.42	6.00V	△
P05.41	Set value corresponding to AI curve 5 inflection point 2 input	-100.0% ~ +100.0%	60.0%	△
P05.42	AI curve 5 maximum input	P05.40 ~ +10.00V	10.00V	△
P05.43	Set value corresponding to AI curve 5 maximum input	-100.0% ~ +100.0%	100.0%	△
P05.44	AI1 filter time	0.00s ~ 10.00s	0.10s	△
P05.46	AI corresponds to the lower limit setting	Units digital: AI1 corresponds to the lower limit setting 0: corresponding to the lower limit setting 1: 0.0%	H.00	△
P05.47	AI1 setting jump point	-100.0% ~ 100.0%	0.0%	△
P05.48	AI1 setting jump amplitude	0.0% ~ 100.0%	0.5%	△
P05.51	AI1 input voltage protection lower limit	0.00V ~ P05.52	3.10V	△

Function code	Name	Setting range	The default value	Change
P05.52	AI1 input voltage protection upper limit	P05.51 ~ 10.00V	6.80V	△
P05.55	Set value corresponding to DI7 minimum pulse input	-100.0% ~ 100.0%	0.0%	△
P05.59	Voltage and current selection of AI	LED Ones Place：Selection of AI1 0：Voltage 1：Current	00	▲

P06 group, output terminal features				
Function code	Name	Setting range	The default value	Chan-ge
P06.00	Relay function selection (TA1-TB1-TC1) RELAY 1	0: no output 1: inverter is running 2: fault output (shutdown) 3: level testing for FDT1 frequency output 4: frequency arrival 5: zero speed (no output duringshutdown) 6: motor overload pre-alarm 7: inverter overload pre-alarm 8: PLC circulation completed 9: accumulative running time reached 10: frequency restricted 11: torque restricted 12: readiness for operation 14: the maximum frequency reached 15: the minimum frequency reached (related to operation) 16: under-voltage state output 17: communication setting 18: zero speed (with output during shutdown) 19: accumulative power-on time reached 20: level testing for FDT2 frequency output 21: frequency 1 output reached 22: frequency 2 output reached 23: current 1 output reached 24: current 2 output reached 25: timing output reached 26: AI1 input over-limit 27: off-load	2	△

Function code	Name	Setting range	The default value	Change
		28: reverse running 29: zero current state 30: module temperature reached 31: output current over-limit 32: the minimum frequency reached (with output during shutdown) 33: alarm output (go on running) 34: running time reached 35: fault output (shutdown and without output during under-voltage) 36: the set count value reached 37: the specified count value reached 38: the length reached 39: brake enable sign		
P06.03	RELAY 1 output delay time	0.0s ~ 3600.0s	0.0s	△
P06.06	DO output terminal valid state selection	0: positive logic 1: negative logic Units digital: RELAY1	000	△
P06.07	AO1 output function selection	0: run frequency 1: set frequency 2: output current 3: output torque (absolute value) 4: output power 5: output voltage 6: AI1 8: communication setting 9: motor rotate speed 10: output current (100.0% corresponds to 1000.0A) 11: bus voltage (100.0% corresponds to 1000.0V) 12: output torque (absolute value) 14: length value 15: count value	0	△

5. Function parameter list

Function code	Name	Setting range	The default value	Chan-ge
P06.09	AO1 zero offset coefficient	-100.0% ~ +100.0%	0.0%	△
P06.10	AO1 gain	-10.00 ~ +10.00	1.00	△
P06.16	AO output mode selection	LED Units digital：A01 selection 0：0V～10V（0～20mA） 1：10V～0V（20～0mA） 2：2V～10V（4～20mA） 3：10V～2V（20～4mA） Note: Output voltage/current settings are selected via the jumper cap on the control board.	0	△

P07 group, keyboard display and function code management				
Function code	Name	Setting range	The default value	Change
P07.00	MF key function selection	0: MF invalid 1: switch between panel command channel and remote command channel (terminal command channel or communication command channel) 2:forward and reverse switch 3: forward inch 4: reverse inch 5: menu mode switch	3	▲
P07.01	Stop key function	0: only valid for keyboard operation 1: valid for any operation	1	△
P07.02	Keyboard parameter copy	Units digital: upload and download 0: no operation 1: parameter upload 2: parameter download (excluding motor parameters) 3: parameter download (including motor parameters) Tens digital: local download permitted 0: parameter download prohibited 1: parameter download permitted	H.00	▲
P07.03	LED running display parameter 1	0000 – FFFF Bit00: run frequency (Hz) Bit01: set frequency (Hz) Bit02: bus voltage (V) Bit03: output voltage (V) Bit04: output current (A) Bit05: output power (kW) Bit06: output torque (%) Bit07: DI input state Bit09: AI1 voltage (V) Bit11: loading speed display Bit12: PID setting Bit13: PID feedback Bit14: PLC stage Bit15: Feedback speed (Hz)	H.001F	△

Function code	Name	Setting range	The default value	Change
P07.04	LED running display parameter 2	000 – 1FFF Bit00: remaining run time Bit01: AI1 voltage before correction (V) Bit03: linear speed Bit04: current power-on time (Min) Bit05: current run time (Min) Bit06: communication setting value Bit07: main frequency X display (Hz) Bit08: auxiliary frequency Y display (Hz) Bit10: count value Bit11: length value Bit12: Motor Speed	H.0000	△
P07.05	LED shutdown state display parameter	000 ~ 1FFF Bit00: set frequency (Hz) Bit01: bus voltage (V) Bit02: DI input state Bit04: AI1 voltage (V) Bit06: PLC stage Bit07: loading speed Bit08: PID setting Bit10: count value Bit11: length value Bit12: Motor Speed	H.0033	△
P07.06	Individual parameter group display selection	Units digital: user customized parameter group display selection 0: not displayed 1: displayed Tens digital: user changed parameter group display selection 0: not displayed 1: displayed	00	△
P07.07	Function code change permission	0: permitted 1: not permitted	0	△

Function code	Name	Setting range	The default value	Change
P07.07	Function code change permission	0: permitted 1: not permitted	0	△
P07.08	Temperature of heat sink	-25.0℃~ 110.0℃	-	●
P07.09	Software version number	0 ~ 65535	-	●
P07.10	0 ~ 65535	0 ~ 65535	-	●
P07.11	User password	0 ~ 65535	0	△
P07.13	Serial number of software material code	0 ~ 9999	—	●
P07.14	Software material code serial number high	0～9999	-	●
P07.16	Keyboard display mode	0: Single display 1: Dual display	0	△
P07.17	Keyboard display Wave filtering time	0～1000	0	△

P08 group, auxiliary function				
Function code	Name	Setting range	The default value	Chan-ge
P08.01	Inch run frequency	0.00Hz ~ the maximum frequency(P00.10)	2.00Hz	△
P08.02	Inch run acceleration time	0.0s ~ 6500.0s	20.0s	△
P08.03	Inch run deceleration time	0.0s ~ 6500.0s	20.0s	△
P08.04	Terminal inch run priority	0: invalid 1: valid	0	△
P08.05	Acceleration time 2	0.0s ~ 6500.0s	Model set	△
P08.06	Deceleration time 2	0.0s ~ 6500.0s	Model set	△
P08.07	Acceleration time 3	0.0s ~ 6500.0s	Model set	△
P08.08	Deceleration time 3	0.0s ~ 6500.0s	Model set	△
P08.09	Acceleration time 4	0.0s ~ 6500.0s	Model set	△
P08.10	Deceleration time 4	0.0s ~ 6500.0s	Model set	△
P08.11	Switch frequency between acceleration time 1 and deceleration time 2	0.00Hz ~ the maximum frequency (P00.10)	0.00Hz	△
P08.12	Switch frequency between deceleration time 1 and acceleration time 2	0.00Hz ~ the maximum frequency (P00.10)	0.00Hz	△
P08.13	Jumping frequency 1	0.00Hz ~ the maximum frequency (P00.10)	0.00Hz	△
P08.14	Jumping frequency 2	0.00Hz ~ the maximum frequency (P00.10)	0.00Hz	△
P08.15	Jumping frequency range	0.00Hz ~ the maximum frequency (P00.10)	0.00Hz	△
P08.16	Validity of jumping frequency during acceleration	0: invalid 1: valid	0	△

Function code	Name	Setting range	The default value	Chan-ge
P08.17	Forward and reverse dead time	0.0s ~ 3000.0s	0.0s	△
P08.18	Reverse permission	0: permitted 1: prohibited	0	△
P08.19	Run mode in case that the set frequency is lower than the lower frequency limit	0: run with the lower frequency limit 1: shutdown 2: run at zero speed	0	△
P08.20	Droop control	0.00Hz ~ 10.00Hz	0.00Hz	△
P08.21	Frequency level detection (FDT1 level)	0.00Hz ~ the maximum frequency (P00.10)	50.00Hz	△
P08.22	Frequency detection lag value (PDT1 level)	0.0%-100.0%	5.0%	△
P08.23	Frequency level detection (FDT2 level)	0.00Hz ~ the maximum frequency (P00.10)	50.00Hz	△
P08.24	Frequency detection lag value (FDT2 level)	0.0%-100.0%	5.0%	△
P08.25	Frequency reaches the checkout	0.0%-100.0%	0.00%	△
P08.26	Frequency reaches detection value 1	0.00Hz ~ the maximum frequency (P00.10)	50.00Hz	△
P08.27	Frequency reaches detection value 1 range	0.0% ~ 100.0%	0.0%	△
P08.28	Frequency reaches detection value 2	0.00Hz ~ the maximum frequency (P00.10)	50.00Hz	△
P08.29	Frequency reaches detection value 2 range	0.0% ~ 100.0%	0.0%	△
P08.30	Zero current detection level	0.0% ~ 300.0% 100.0% corresponds to motor rated current ratio	5.0%	△

Function code	Name	Setting range	The default value	Chan-ge
P08.31	Zero current detection lag time	0.01s ~ 600.00s	0.10s	△
P08.32	Output current above threshold	0.0% (not detected) 0.1% -300.0% (motor rated current)	200.0%	△
P08.33	Output current above threshold lag time	0.00s ~ 600.00s	0.10s	△
P08.34	Current reaches detection level 1	0.0% ~ 300.0% (motor rated current)	100.0%	△
P08.35	Current reaches detection level 1 range	0.0%-300.0% (motor rated current)	0.0%	△
P08.36	Current reaches detection level 2	0.0%-300.0% (motor rated current)	100.0%	△
P08.37	Current reaches detection level 2 range	0.0%-300.0% (motor rated current)	0.0%	△
P08.38	Timing function selection	0: invalid 1: valid	0	▲
P08.39	Timing run time selection	0: P08.40 setting 1: AI1 Analog output range corresponds to P08.40	0	▲
P08.40	Timing run time	0.0Min-6500.0Min	0.0Min	▲
P08.41	Accumulative power-on time	0-65535h	-	●
P08.42	Set power-on time	0h-65000h	.0h	
P08.43	Reach set running time	0h – 6500.0Min	0.0Min	▲
P08.44	Accumulative running time	0-65535h	-	●
P08.45	Set running time	0h-65000h	0h	△

Function code	Name	Setting range	The default value	Chan-ge
P08.46	Module temperature	0℃-100℃	75℃	△
P08.47	Fan control	0: The fan operates when running or when the temperature is high at 42°C. 1: The fan operates continuously 2: The fan operates when running	2	▲
P08.49	Loading speed display coefficient	0.0001-6.5000	1.0000	△
P08.50	Loading speed display decimal place	0: 0 place 1: 1 place	0	△
P08.51	Emergency stop deceleration time	0.0s～6500.0s	10s	△
P08.52	AI 10V Compensation start temperature	0～160℃	55℃	△
P08.53	AI 10V Compensation start voltage	0.000～10.000V	9.880V	△
P08.55	Vector and V/F mode 0Hz voltage output selection	0：Non voltage output 1：With voltage output	0	△
P08.56	Vector and V/F mode 0Hz voltage output frequency threshold	0.00Hz～10.00Hz	0.10Hz	△
P08.57	Up / down integration rate	0.0～100.0s	4.0s	△

P09 group, protection and fault record				
Function code	Name	Setting range	The default value	Chan-ge
P09.00	Motor overload protection selection	0: prohibited 1: permitted	1	△
P09.01	Motor overload protection gain	0.20 ~ 10.00	1.00	△
P09.02	Motor overload pre-alarm system	50% ~ 100%	80%	△
P09.03	Over-voltage stall gain	0 ~ 100	30	△
P09.04	Over-voltage protection voltage	380V Model：630V~795V	710V	△
		220V Model：350V~390V	370V	△
P09.05	Over-current stall gain	0 ~ 100	20	△
P09.06	Over-current stall protection current	50% ~ 200%	150%	△
P09.07	Under-voltage value setting	60.0% ~ 140.0%	100.0%	△
P09.08	Rapid current-limiting enabled	380V Model：200.0V ~ 2500.0V	810.0V	▲
		220V Model：200.0V ~ 2500.0V	400.0V	▲
P09.09	Power-on short-circuit protection to earth selection	0: disabled 1: enabled	1	△
P09.10	Output out-phase selection	0: invalid 1: valid	1	△
P09.11	Input out-phaseprotection selection	Units digital: Input out-phaseprotection action 0: invalid 1: valid Tens digital: Input out-phaseprotection method 0:model set 1: software	11	△
P09.12	Output out-phase protection selection	0: invalid 1: valid	1	△

Function code	Name	Setting range	The default value	Chan-ge
P09.13	Low temperature fault Protection	0: invalid 1: valid	1	△
P09.15	Dynamic braking selection	0: invalid 1: valid	1	▲
P09.16	Dynamic braking voltage value	380V Model：630V~795V	680V	▲
		220V Model：350V~390V	350V	▲
P09.17	Dynamic braking utilization rate	0% ~ 100%	100%	▲
P09.18	Instant blackout action selection	0: invalid 1: deceleration 2: deceleration and stop	0	△
P09.19	Instant action suspension voltage	80.0% ~ 100.0% (standard bus voltage)	90.0%	△
P09.20	Instant blackout voltage increase time	0.00s ~ 100.00s	0.50s	△
P09.21	Instant blackout action voltage	60.0% ~ 100.0% (standard bus voltage)	80.0%	△
P09.22	Off-load protection selection	0: invalid 1: valid	0	△
P09.23	Off-load detection level	0.0 ~ 100.0%	10.0%	△
P09.24	Off-load detection time	0.0 ~ 60.0s	1.0s	△
P09.25	Auto fault reset times	0 ~ 20	0	△
P09.26	Auto fault reset interval	0.1s ~ 100.0s	1.0s	△
P09.28	Input out-phase filter coefficient	0 ~ 50000	50	△
P09.29	Input out-phasevoltagethres hold	50.0 ～200.0V	70.0V	▲
P09.30	soft start fault detection times	0~2000	5	△
P09.33	Fault protection action selection 1	Units digital: motor overload 0: free parking	00000	△

Function code	Name	Setting range	The default value	Chan-ge
		1: stop with stop method 2: go on running Tens digital: input out-phase(Err12) (same as units digital) Hundreds digital: output out-phase(Err13) (same as units digital) Thousands digital: external fault (Err15) (same as units digital) Ten thousands digital: communication abnormality (Err16)(same as units digital)		
P09.34	Fault protection action selection 2	Units digital: terminal 24V short circuit 0: free parking 1: stop with stop method 2: go on running	00000	△

Function code	Name	Setting range	The default value	Chan-ge
P09.34	Fault protection action selection 2	Tens digital: abnormal function code read and write(Err21) 0: free parking 1: stop with stop method Hundreds place: Excessive speed deviation (Err42) (same as ones place) Thousands place: brake VCE fault (Err01) (same as ones place) Ten thousand digit: running time reached(Err26) (same as one digit)	00000	△
P09.35	Fault protection action selection 3	Units digital: user customized fault 1(Err27) 0: free parking 1: stop with stop method 2: go on running Tens digital: user customized fault 2(Err28) 0: free parking 1: stop with stop method 2: go on running Hundreds digital: Power-on time reached(Err29) 0: free parking 1: stop with stop method 2: go on running Thousands digital: off-load(Err30) 0: free parking 1: deceleration and stop 2: directly go on running with 7% motor rated power and automatically return to set frequency if no off-load Ten thousands digital: PID feedback broken line(Err31)	00000	△

5. Function parameter list

Function code	Name	Setting range	The default value	Chan-ge
P09.38	AI temperature drift compensation enable	0：Forbid 1：Allow	1	△
P09.39	Output phase loss current Judgment threshold	0~50	10	▲
P09.40	Run frequency selection in case of fault	0: running with current run frequency 1: running with set frequency 2: running with the upper frequency limit 3: running with the lower frequency limit 4: running with standby frequency	0	△
P09.41	Abnormal standby frequency	0.0%-100.0% (100.0% corresponds to the maximum frequency P00.10)	100.0%	△
P09.42	First fault type	0: no fault 1: braking VCE fault (Err01) 2: acceleration over-current (Err02) 3: deceleration over-current (Err03) 4: constant speed over-current (Err04) 5: acceleration over-voltage (Err05) 6: deceleration over-voltage (Err06) 7: constant speed over-voltage (Err07) 8: Reserved 9: under-voltage (Err09) 10: inverter overload (Err10) 11: motor overload (Err11) 12: input out-phase (Err12) 13: output out-phase (Err13) 14: Abnormal module temperature (Err14)	-	●

Function code	Name	Setting range	The default value	Chan-ge
P09.43	Second fault type	15: external fault (Err15) 16: communication abnormality (Err16) 17: interphase (U, V and W) short circuit (Err17) 18: current detection abnormality (Err18) 19: motor tuning abnormality (Err19) 21: abnormal parameter read and write (Err21) 22: abnormal parameter download (Err22) 23: motor short circuit to earth (Err23) 26: accumulative running time reached (Err26) 27: user customized fault 1 (Err27) 28: user customized fault 2 (Err28) 29: Cumulative power-on time reached (Err29) 30: Load drop (Err30) 31: PID feedback loss during operation (Err31) 32: Inverter unit U-phase protection (Err32) 33: Inverter unit V-phase protection (Err33) 34: Inverter unit W-phase protection (Err34) 35: Soft start failure (Err35) 40: Fast current limiting timeout (Err40) 41: Motor switch during operation (Err41)	-	●
P09.44	Third (last) fault type		-	●
P09.45	Frequency at the third (last) fault	-	-	●

Function code	Name	Setting range	The default value	Chan-ge
P09.46	Frequency at the third (last) fault	-	-	●
P09.47	Bus voltage at the third (last) fault	-	-	●
P09.48	Input terminal state at the third (last) fault	-	-	●
P09.49	Output terminal state at the third (last) fault	-	-	●
P09.50	Inverter state at the third (last) fault	-	-	●
P09.51	Power-on time at the third (last) fault	-	-	●
P09.52	Running time at the third (last) fault	-	-	●
P09.53	Frequency at the second fault	-	-	●
P09.54	current at the second fault	-	-	●
P09.55	Bus voltage at the second fault	-	-	●
P09.56	Input terminal state at the second fault	-	-	●
P09.57	Output terminal state at the second fault	-	-	●

Function code	Name	Setting range	The default value	Change
P09.58	Inverter state at the second fault	-	-	●
P09.59	Power-on time at the second fault	-	-	●
P09.60	Running time at the second fault	-	-	●
P09.61	Running time at the second fault	-	-	●
P09.62	Current at first fault	-	-	●
P09.63	Bus voltage at first fault	-	-	●
P09.64	Input terminal status at first fault	-	-	●
P09.65	Output terminal status at first fault	-	-	●
P09.66	Inverter state at the first fault	-	-	●
P09.67	Power-on time at the first fault	-	-	●
P09.68	Running time at the first fault	-	-	●
P09.69	Temperature at the third fault	-	-	●

P10 group, PID function				
Function code	Name	Setting range	The default value	Chan-ge
P10.00	PID given source	0: P10.01 setting 1: AI1 3: communication setting 4: multi speeds 6:Reserve	0	△
P10.01	PID value setting	0.0% ~ 100.0%	50.0%	△
P10.02	PID feedback source	0: AI1 3: communication setting	0	△
P10.03	PID action direction	0: forward 1: reverse	0	△
P10.04	PID given feedback range	0 ~ 65535	1000	△
P10.05	Proportional gain Kp1	0.0 ~ 100.0	20.0	△
P10.06	Integral time Ti1	0.01s ~ 10.00s	2.00s	△
P10.07	Derivative time Td1	0.000s ~ 10.000s	0.000s	△
P10.08	PID reverse cutoff frequency	0.00 ~ the maximum frequency	2.00Hz	△
P10.09	PID deviation limit	0.0% ~ 100.0%	0.0%	△
P10.10	PID integral range	0.00% ~ 100.00%	0.10%	△
P10.11	PID given change time	0.00 ~ 650.00s	0.00s	△
P10.12	PID feedback filter time	0.00 ~ 60.00s	0.00s	△
P10.13	PID output filter time	0.00 ~ 60.00s	0.00s	△
P10.14	Proportional gain Kp2	0.0 ~ 100.0	20.0	△
P10.15	Integral time Ti2	0.01s ~ 10.00s	2.00s	△
P10.16	Derivative time Td2	0.000s ~ 10.000s	0.000s	△
P10.17	PID parameter switch	0: not switched 1: switched through DI terminal 2: automatically switch based on deviation	0	△
P10.18	PID parameter switch deviation 1	0.0% ~ P10.19	20.0%	△

Function code	Name	Setting range	The default value	Chan-ge
P10.19	PID parameter switch deviation 2	P10.18 ~ 100.0%	80.0%	△
P10.20	PID initial value	0.0% ~ 100.0%	0.0%	△
P10.21	PID initial time retention time	0.00 ~ 650.00s	0.00s	△
P10.22	Forward maximum value for two output deviation	0.00% ~ 100.00%	1.00%	△
P10.23	Reverse maximum value for two output deviation	0.00% ~ 100.00%	1.00%	△
P10.24	PID integral property	Units digital: integral separation 0: invalid 1: valid Tens digital: whether stop integrating after the output reaches threshold 0: no 1: yes	00	△
P10.25	PID feedback broken line detection	0.0%: no broken line 0.1%-100.0%	0.0%	△
P10.26	PID feedback broken line detection time	0.0s ~ 20.0s	0.0s	△
P10.27	PID operation during shutdown	0: no operation during shutdown 1: operation during shutdown	0	△
P10.28	Wakeup frequency	Sleep frequency (P10.30) ~ The maximum frequency (P00.10)	0.00Hz	△
P10.29	Wakeup delay time	0.0s ~ 6500.0s	0.0s	△
P10.30	Sleep frequency	0.00Hz- wakeup frequency (P10.28)	0.00Hz	△
P10.31	Sleep delay time	0.0s ~ 6500.0s	0.0s	△
P10.32	Wake-up bias	0.0%： Wake-up frequency valid 0.1%~100.0%: Wake-up bias valid	5.0%	△

P11 group, multi speed and simple PLC				
Function code	Name	Setting range	The default value	Chan-ge
P11.00	Multi speed 0	-100.0% ~ 100.0%	0.0%	△
P11.01	Multi speed 1	-100.0% ~ 100.0%	0.0%	△
P11.02	Multi speed 2	-100.0% ~ 100.0%	0.0%	△
P11.03	Multi speed 3	-100.0% ~ 100.0%	0.0%	△
P11.04	Multi speed 4	-100.0% ~ 100.0%	0.0%	△
P11.05	Multi speed 5	-100.0% ~ 100.0%	0.0%	△
P11.06	Multi speed 6	-100.0% ~ 100.0%	0.0%	△
P11.07	Multi speed 7	-100.0% ~ 100.0%	0.0%	△
P11.08	Multi speed 8	-100.0% ~ 100.0%	0.0%	△
P11.09	Multi speed 9	-100.0% ~ 100.0%	0.0%	△
P11.10	Multi speed 10	-100.0% ~ 100.0%	0.0%	△
P11.11	Multi speed 11	-100.0% ~ 100.0%	0.0%	△
P11.12	Multi speed 12	-100.0% ~ 100.0%	0.0%	△
P11.13	Multi speed 13	-100.0% ~ 100.0%	0.0%	△
P11.14	Multi speed 14	-100.0% ~ 100.0%	0.0%	△
P11.15	Multi speed 15	-100.0% ~ 100.0%	0.0%	△
P11.16	Simple PLC operation mode	0: single operation and shutdown 1: final value retention after single operation 2: circulation all the time	0	△
P11.17	Power-off memory selection of simple PLC	Units digital: power-off memory selection 0: no power-off memory 1: power-off memory Tens digital: shutdown memory selection 0: no shutdown memory 1: shutdown memory	00	△

Function code	Name	Setting range	The default value	Change
P11.18	Running time at section 0 of simple PLC	0.0s(h) ~ 6500.0s(h)	0.0s(h)	△
P11.19	Acceleration and deceleration time selection at section 0 of simple PLC	0 ~ 3	0	△
P11.20	Running time at section 1 of simple PLC	0.0s (h) ~ 6500.0s(h)	0.0s(h)	△
P11.21	Acceleration and deceleration time selection at section 1 of simple PLC	0 ~ 3	0	△
P11.22	Running time at section 2 of simple PLC	0.0s (h) ~ 6500.0s(h)	0.0s(h)	△

Function code	Name	Setting range	The default value	Chan-ge
P11.23	Acceleration and deceleration time selection at section 2 of simple PLC	0 ~ 3	0	△
P11.24	Running time at section 3 of simple PLC	0.0s (h) ~ 6500.0s(h)	0.0s(h)	△
P11.25	Acceleration and deceleration time selection at section 3 of simple PLC	0 ~ 3	0	△
P11.26	Running time at section 4 of simple PLC	0.0s (h) ~ 6500.0s(h)	0.0s(h)	△
P11.27	Acceleration and deceleration time selection at section 4 of simple PLC	0 ~ 3	0	△
P11.28	Running time at section 5 of simple PLC	0.0s (h) ~ 6500.0s(h)	0.0s(h)	△
P11.29	Acceleration and deceleration time selection at section 5 of simple PLC	0 ~ 3	0	△
P11.30	Running time at section 6 of simple PLC	0.0s (h) ~ 6500.0s(h)	0.0s(h)	△
P11.31	Acceleration and deceleration time selection at section 6 of simple PLC	0 ~ 3	0	△

Function code	Name	Setting range	The default value	Chan-ge
P11.32	Running time at section 7 of simple PLC	0.0s (h) ~ 6500.0s(h)	0.0s(h)	△
P11.33	Acceleration and deceleration time selection at section 7 of simple PLC	0 ~ 3	0	△
P11.34	Running time at section 8 of simple PLC	0.0s (h) ~ 6500.0s(h)	0.0s(h)	△
P11.35	Acceleration and deceleration time selection at section 8 of simple PLC	0 ~ 3	0	△
P11.36	Running time at section 9 of simple PLC	0.0s (h) ~ 6500.0s(h)	0.0s(h)	△
P11.37	Acceleration and deceleration time selection at section 9 of simple PLC	0 ~ 3	0	△
P11.38	Running time at section 10 of simple PLC	0.0s (h) ~ 6500.0s(h)	0.0s(h)	△
P11.39	Acceleration and deceleration time selection at section 10 of simple PLC	0 ~ 3	0	△
P11.40	Running time at section 11 of simple PLC	0.0s (h) ~ 6500.0s(h)	0.0s(h)	△
P11.41	Acceleration and deceleration time selection at section 11 of simple PLC	0 ~ 3	0	△

Function code	Name	Setting range	The default value	Chan-ge
P11.42	Running time at section 12 of simple PLC	0.0s (h) ~ 6500.0s(h)	0.0s(h)	△
P11.43	Acceleration and deceleration time selection at section 12 of simple PLC	0 ~ 3	0	△
P11.44	Running time at section 13 of simple PLC	0.0s (h) ~ 6500.0s(h)	0.0s(h)	△
P11.45	Acceleration and deceleration time selection at section 13 of simple PLC	0 ~ 3	0	△
P11.46	Running time at section 14 of simple PLC	0.0s (h) ~ 6500.0s(h)	0.0s(h)	△
P11.47	Acceleration and deceleration time selection at section 14 of simple PLC	0 ~ 3	0	△
P11.48	Running time at section 15 of simple PLC	0.0s (h) ~ 6500.0s(h)	0.0s(h)	△
P11.49	Acceleration and deceleration time selection at section 15 of simple PLC	0 ~ 3	0	△
P11.50	Running time unit of simple PLC	0: s 1: h	0	△
P11.51	Multi speed 0 setting mode	0: function code P11.00 setting 1: AI1 3: PID 4: preset frequency (P00.08) setting, UP/DOWN changeable	0	△

P12 group, swing frequency				
Function code	Name	Setting range	The default value	Chan-ge
P12.00	Swing frequency set mode	0: relative to center frequency 1: relative to the maximum frequency	0	△
P12.01	Amplitude	0.0% ~ 100.0%	0.0%	△
P12.02	Startup frequency	0.0% ~ 50.0%	0.0%	△
P12.03	Period	0.1s ~ 3000.0s	10.0s	△
P12.04	Rise time of triangular wave	0.1% ~ 100.0%	50.0%	△
P12.05	Set length	0m ~ 65535m	1000m	△
P12.06	Actual length	0m ~ 65535m	0m	●
P12.07	Number of pulses per meter	0.1 ~ 6553.5	100.0	△
P12.08	Set count value	Specifies count value（P12.09） ~ 65535	1000	△
P12.09	Specifies count value	1 ~ Set count value（P12.08）	1000	△
P12.10	Automatic reset when the set count value reached	0：Prohibited 1：Allowed	1	△

P13 group, communication parameter				
Function code	Name	Setting range	The default value	Chan-ge
P13.00	Communication baud rate	0: 300BPS 1: 600BPS 2: 1200BPS 3: 2400BPS 4: 4800BPS 5: 9600BPS 6: 19200BPS 7: 38400BPS 8: 57600BPS 9: 115200BPS	5	△
P13.01	MODBUS Date check format	0: no check (8-N-2) 1: even parity check (8-E-1) 2: Odd parity check (8-O-1) 3: no check (8-N-1) (MODBUS valid)	3	△
P13.02	Address	1 ~ 247	1	△
P13.03	MODBUS Response delay	0 ~ 20ms (MODBUS valid)	2	△
P13.04	Communication timeout fault time	0.0: invalid 0.1 ~ 60.0s	0.0	△
P13.05	Communication data format selection	0: non-standard MODBUS protocol 1: standard MODBUS protocol	1	△
P13.06	Current resolution during communication read	0: 0.01A 1: 0.1A	0	△

P14 group, virtual IO				
Function code	Name	Setting range	The default value	Chan-ge
P14.00	Virtual VID1 Terminal function selection	0-46 (refer to P05 group DI terminal function selection)	0	▲
P14.01	Virtual VID2 Terminal function selection	0-46 (refer to P05 group DI terminal function selection)	0	▲
P14.02	Virtual VID3 Terminal function selection	0-46 (refer to P05 group DI terminal function selection)	0	▲
P14.03	Virtual VID4 Terminal function selection	0-46 (refer to P05 group DI terminal function selection)	0	▲
P14.04	Virtual VID5 Terminal function selection	0-46 (refer to P05 group DI terminal function selection)	0	▲
P14.05	Virtual VDI terminal status setting	0: VDI is valid depending on virtual VDOx state 1: VDI is valid through function code P14.06 setting Units digital: virtual VDI1 Tens digital: virtual VDI2 Hundreds digital: virtual VDI3 Thousands digital: virtual VDI4 Ten thousands digital: virtual VDI5	00000	▲
P14.06	Virtual VDI terminal status setting	0: invalid 1: valid Units digital: virtual VDI1 Tens digital: virtual VDI2 Hundreds digital: virtual VDI3 Thousands digital: virtual VDI4 Ten thousands digital: virtual VDI5	00000	△

5. Function parameter list

Function code	Name	Setting range	The default value	Chan-ge
P14.07	Function selection when AI1 terminal is used as D	0-46 (refer to P05 group DI terminal function selection)	0	▲
P14.09	Valid mode selection when AI1 terminal is used as D	0: valid for high level 1: valid for low level Units digital: AI1	00	▲

Function code	Name	Setting range	The default value	Change
P14.10	Virtual VDO1 output selection	0: physical DIx interior short circuit 1-39: refer to P06 group physical DO output selection	0	△
P14.11	Virtual VDO2 output selection	0: physical DIx interior short circuit 1-39: refer to P06 group physical DO output selection	0	△
P14.12	Virtual VDO3 output selection	0: physical DIx interior short circuit 1-39: refer to P06 group physical DO output selection	0	△
P14.13	Virtual VDO4 output selection	0: physical DIx interior short circuit 1-39: refer to P06 group physical DO output selection	0	△
P14.14	Virtual VDO5 output selection	0: physical DIx interior short circuit 1-39: refer to P06 group physical DO output selection	0	△
P14.15	VDO1 output delay time	0.0s ~ 3600.0s	0.0s	△
P14.16	VDO2 output delay time	0.0s ~ 3600.0s	0.0s	△
P14.17	VDO3 output delay time	0.0s ~ 3600.0s	0.0s	△
P14.18	VDO4 output delay time	0.0s ~ 3600.0s	0.0s	△
P14.19	VDO5 output delay time	0.0s ~ 3600.0s	0.0s	△
P14.20	VDO output terminal valid state selection	0: positive logic 1: negative logic Units digital: VDO1 Tens digital: VDO2 Hundreds digital: VDO3 Thousands digital: VDO4 Ten thousands digital: VDO5	0000	△

P15 group, motor 2 parameter				
Function code	Name	Setting range	The default value	Chan-ge
P15.00	Motor type selection	0: common asynchronous motor 1: variable frequency asynchronous motor	0	▲
P15.01	Motor rated power	0.1kW ~ 1000.0kW	Model set	▲
P15.02	Motor rated voltage	1V ~ 2000V	Model set	▲
P15.03	Motor rated current	0.01A-650.00A (Inverter frequency ≤55kW) 0.1A-6500.00A (inverter frequency >55kW)	Model set	▲
P15.04	motor rated frequency	0.01Hz ~ the maximum frequency	Model set	▲
P15.05	Motor rated rotate speed	1rpm ~ 65000rpm	Model set	▲
P15.06	Stator resistance of asynchronous motor	0.001Ω ~ 65.000Ω (Inverter frequency≤55kW) 0.0001Ω ~ 6.5000Ω (Inverter frequency>55kW)	Model set	▲
P15.07	Rotor resistance of asynchronous motor	0.001Ω ~ 65.000Ω (Inverter frequency≤55kW) 0.0001Ω ~ 6.5000Ω (Inverter frequency>55kW)	Model set	▲
P15.08	Drain inductance of asynchronous motor	0.01mH ~ 650.00mH (Inverter frequency≤ 55kW) 0.001mH ~ 65.000mH (Inverter frequency>55kW)	Model set	▲
P15.09	Mutual inductance of asynchronous motor	0.1mH ~ 6500.0mH (Inverter frequency≤ 55kW) 0.01mH ~ 650.00mH (Inverter frequency>55kW)	Model set	▲

Function code	Name	Setting range	The default value	Chan-ge
P15.10	No-load current of asynchronous motor	0.01A ~ P15.03 (Inverter frequency≤ 55kW) 0.1A ~ P15.03 (Inverter frequency>55kW)	Model set	▲
P15.11	Velocity loop proportional gain 1	1 ~ 100	30	△
P15.12	Velocity loop integral time 1	0.01s ~ 10.00s	1.00s	△
P15.13	Switch frequency 1	0.00 ~ P15.16	5.00Hz	△
P15.14	Velocity loop proportional gain 2	1 ~ 100	30	△
P15.15	Velocity loop integral time 2	0.01s ~ 10.00s	1.00s	△
P15.16	Switch frequency 2	P15.13 ~ the maximum frequency(P00.10)	10.00Hz	△
P15.17	VC slip compensation coefficient	50% ~ 200%	100%	△
P15.18	Velocity loop filter time constant	0.000s ~ 0.100s	0.000s	△
P15.20	Velocity control torque upper limit source	0: P15.21 setting 1: AI1 3: communication setting 7: Reserved (Full range of item 1-7 corresponds to P15.21)	0	△
P15.21	Velocity control torque upper limit digital setting	0.0% ~ 200.0%	150.0%	△
P15.22	Excitation regulation proportional gain	0 ~ 60000	2000	△
P15.23	Excitation regulation integral gain	0 ~ 60000	1300	△

5. Function parameter list

Function code	Name	Setting range	The default value	Chan-ge
P15.24	Torque regulation proportional gain	0 ~ 60000	2000	△
P15.25	Torque regulation integral gain	0 ~ 60000	1300	△
P15.26	Velocity loop integral property	0: invalid 1: valid	0	△
P15.30	Motor 2 control mode selection	0~2	0	▲
P15.31	Acceleration and deceleration time selection of motor 2	0: same as motor 1 1: acceleration and deceleration time1 2: acceleration and deceleration time 2 3: acceleration and deceleration time 3 4: acceleration and deceleration time 4	0	△
P15.32	Torque boost of motor 2	0.0%: auto 0.1% ~ 30.0%	Model set	△
P15.33	Oscillation suppression gain of motor 2	0 ~ 100	Model set	△

P16 group, control optimization parameter				
Function code	Name	Setting range	The default value	Chan-ge
P16.00	DPWM switch upper frequency limit	0.00Hz ~ 15.00Hz	12.00Hz	△
P16.01	PWM modulation system	0: asynchronous 1: synchronous	0	△
P16.02	Dead zone compensation mode selection	0: no compensation 1: mode 1 2: mode 2	1	△
P16.03	Random PWM depth	0: random PWM is invalid 1 ~ 10: PWM carrier random depth	0	△
P16.04	Current detection compensation	0 ~ 100	5	△
P16.05	Open loop vector optimization mode selection	0: not optimized 1: mode 1 2: mode 2	2	▲
P16.08	SVC Maximum wave filtering coefficient of low speed rotor speed	0.030s ~ 2.000s	0.100s	△
P16.09	SVC wave filtering coefficient of rotor speed	0.000s ~ 2.000s	Model set	△
P16.11	Selection of magnetic weakening algorithm	Ones Place：Closed loop vector flux-weakening algorithm 0：Speed adjustment 1：Feedback adjustment Tens Place：Opened loop vector flux-weakening algorithm 0：Speed adjustment 1：Feedback adjustment	H.01	▲
P16.12	Flux-weakening proportional gain	0~65000	1000	△

5. Function parameter list

Function code	Name	Setting range	The default value	Chan-ge
P16.13	Flux-weakening proportional gain	0~65000	4000	△
P16.14	lower limit of Flux-weakening adjustment	5.0%~100.0%	30.0%	△
P16.15	slip frequency coefficient	100~4096	Model set	△
P16.16	V/F Wave filtering coefficient of voltage phase angle	1~200	Model set	△
P16.17	Static friction compensation value	-50.0%~50.0%	0.0%	△

unction code	Name	Setting range	The default value	Change
P16.18	Static friction compensation cut-off frequency	0.00HZ~MAX (P00.10)	2.0Hz	△
P16.19	Holding time of static friction compensation	0.0~60.0s	2.0s	△
P16.20	Elimination time of static friction compensation	0.0~60.0s	1.0s	△
P16.21	Initial value of sliding friction compensation	-50.0%~50.0%	0.0%	△
P16.22	End value of sliding friction compensation	-50.0%~50.0%	0.0%	△

5. Function parameter list

P17 group, user's customization				
Function code	Name	Setting range	The default value	Change
P17.00	User function code 0	u00.XX~u30.XX	u88.88	△
P17.01	User function code 1		u88.88	△
P17.02	User function code 2		u88.88	△
P17.03	User function code 3		u88.88	△
P17.04	User function code 4		u88.88	△
P17.05	User function code 5		u88.88	△
P17.06	User function code 6		u88.88	△
P17.07	User function code 7		u88.88	△
P17.08	User function code 8		u88.88	△
P17.09	User function code 9		u88.88	△
P17.10	User function code 10		u88.88	△
P17.11	User function code 11		u88.88	△
P17.12	User function code 12		u88.88	△
P17.13	User function code 13		u88.88	△
P17.14	User function code 14		u88.88	△
P17.15	User function code 15		u88.88	△
P17.16	User function code 16		u88.88	△
P17.17	User function code 17		u88.88	△
P17.18	User function code 18		u88.88	△
P17.19	User function code 19		u88.88	△
P17.20	User function code 20		u88.88	△
P17.21	User function code 21		u88.88	△
P17.22	User function code 22		u88.88	△
P17.23	User function code 23		u88.88	△
P17.24	User function code 24		u88.88	△
P17.25	User function code 25		u88.88	△
P17.26	User function code 26		u88.88	△
P17.27	User function code 27		u88.88	△
P17.28	User function code 28		u88.88	△
P17.29	User function code 29		u88.88	△

P19 group,holding brake logic control module				
Function code	Name	Setting range	The default value	Change
P19.00	Holding box logic enable	0: holding box logic prohibition 1: Hoding box logic enable	0	▲
P19.01	Holding box release current threshold	0 ~ 200% (Relative to the motor)	50%	△
P19.02	Holding box applied current threshold	0 ~ 200% (Relative to the motor)	10%	△
P19.03	Holding box release the frequency threshold	0.10 ~ 20.00Hz	1.00Hz	△
P19.04	Holding box applied frequency threshold	0.10 ~ 20.00Hz	2.00Hz	△
P19.05	Holding box operation frequency holding time before release	0.0 ~ 25.0s	0.0s	△
P19.06	Holding box operation frequency holding time after release	0.0 ~ 25.0s	0.0s	△
P19.07	Holding box operating frequency holding time after application	0.0 ~ 25.0s	0.0s	△
P19.08	Holding box current duration before release	0.0 ~ 25.0s	0.0s	△

5.2 Monitor parameter list

P30 group, display group		
Function code	Name	Minimum unit
P30.00	Run frequency (Hz)	0.01Hz
P30.01	Set frequency (Hz)	0.01Hz
P30.02	Bus voltage (V)	0.1V
P30.03	Output voltage (V)	1V
P30.04	Output current (A)	0.01A
P30.05	output power (kW)	0.1kW
P30.06	Output torque (%)	0.1%
P30.07	DI input state	1
P30.09	AI1 voltage (V)	0.01V
P30.11	Loading speed setting	1
P30.12	PID setting	1
P30.13	PID feedback	1
P30.14	PLC stage	1
P30.15	Feedback speed (Hz)	0.01Hz
P30.16	Remaining running time	0.1Min
P30.17	AI1 voltage before correction (V)	0.001V
P30.19	Linear speed	1m/Min
P30.20	Current power-on time	1Min
P30.21	Current running time	0.1Min
P30.22	Communication setting value	0.01%
P30.23	Main frequency X display	0.01Hz
P30.24	Auxiliary frequency Y display	0.01Hz
P30.25	View address value of any memory	1
P30.26	Target torque (%)	0.1%
P30.28	Power factor angle	0.1°
P30.29	VF separation target voltage	1V
P30.30	VF separation output voltage	1V
P30.31	Visual display of DI input state	1
P30.33	Visual display of DI function state 1 (function 01-function 40)	1

Function code	Name	Minimum unit
P30.34	Visual display of DI function state 2 (function 41-function 44)	1
P30.35	Fault information	1
P30.36	Set frequency (%)	0.01%
P30.37	Run frequency (%)	0.01%
P30.38	Inverter state	1
P30.39	Upper torque limit	0.1%
P30.40	Count value	1
P30.41	Length value	1
P30.42	Motor rotation speed	1
P30.43	DSP temperature℃	1
P30.44	AI temperature drift voltage deviation	1
P30.45	AI1 temperature drift compensation value	1
P30.47	True time of Trial run	1h
P30.48	Remaining time of trial run	1h
P30.49	Monitoring speed	0.01Hz
P30.50	Rotation speed tracking initial frequency	0.01Hz
P30.51	Output torque (relative to the rated torque)	0.1%
P30.52	Actual carrier frequency	0.1KHz
P30.53	Hold box logic instruction	1
P30.56	Low cumulative power consumption	1 kW·h
P30.57	High cumulative power consumption	10000 kW·h
P30.58	Radiator temperature	0.1℃
P30.59	V/F overvoltage limit	0.1V

6. Fault and diagnosic

When the inverter fails to work, LED digital tube displays the corresponding fault code, fault relay is activated, the inverter stops output, the motor stops free running. When the inverter fails to work during operation, please check the fault types, cause and countermeasures according to the contents of this chapter. The table is only used for reference. Do not disassemble or transform the inverter by yourself and if you cannot rule out the causes, please contact our company or agent for technical support.

Fault code	Type offault	Possible cause	Countermeasures
Err.02	Acceleration over-current	1. There is grounding or short circuit in inverter output circuit 2. Vector control is used but the parameters are not tuned 3. Accelerating too fast 4. Manual torque boost or inappropriate V/F curve 5. Too low voltage 6. Start the rotating motor 7. The load is increased suddenly during acceleration 8. Too low power of inverter	1. Rule out peripheral faults 2. Tune motor parameters 3. Increase the acceleration time 4. Manually adjust torque or V/F curve 5. Adjust the voltage to its normal range 6. Select rotational speed tracking start or start after the motor stops 7. Remove the load suddenly increased 8. Select the inverter with greater power
Err.03	Deceleration over-current	1. There is grounding or short circuit in inverter output circuit 2. Vector control is used but the parameters are not tuned 3. Decelerating too fast 4. Too low voltage 5. The load is increased suddenly during deceleration 6. No brake unit and resistor	1. Rule out peripheral faults 2. Tune motor parameters 3. Increase the deceleration time 4. Adjust the voltage to its normal range 5. Remove the load suddenly increased 6. Install brake unit and resistor
Err.04	Constant speed over-current	1. There is grounding or short circuit in inverter output circuit 2. Vector control is used but the parameters are not tuned 3. Too low voltage 4. The load is increased suddenly during operation 5. Too low power of inverter	1. Rule out peripheral faults 2. Tune motor parameters 3. Adjust the voltage to its normal range 4. Remove the load suddenly increased 5. Select the inverter with greater power

6. Fault and diagnosic

Fault code	Type offault	Possible cause	Countermeasures
Err.05	Acceleration overvoltage	1. Input voltage too high 2. External force imposes on the motor during acceleration 3. Accelerating too fast 4. No brake unit and resistor	1. Adjust the voltage to its normal range 2. Remove external force or install brake resistor 3. Increase the acceleration time 4. Install brake unit and resistor
Err.06	Over-voltage during decelerated running	1. Input voltage too high 2. External force imposes on the motor during deceleration 3. Decelerating too fast 4. No brake unit and resistor	1. Adjust the voltage to its normal range 2. Remove external force or install brake resistor 3. Increase the deceleration time 4. Install brake unit and resistor
Err.07	Constant speed over-voltage	1. Input voltage too high 2. External force imposes on the motor during operation	1. Adjust the voltage to its normal range 2. Remove external force or install brake resistor
Err.09	Under-voltag e	1. Instant blackout 2. Inverter input voltage toolow 3. Bus voltage too low 4. Abnormal rectifier bridge and buffer resistance	1. Fault reset 2. Adjust the voltage to its normal range 3. Seek for technical support 4. Seek for technical support
Err.10	Inverter over-load	1. Load too high or motor stalling 2. Too low power of inverter	1. Reduce the load and check the motor and the inverter 2. Select the inverter with greater power
Err.11	Motor over-load	1. Whether motor protection parameter P09.01 is appropriate 2. Load too high or motor stalling 3. Too low power of inverter	1. Properly set the parameter 2. Reduce the load and check the motor and the inverter 3. Select the inverter with greater power

Fault code	Type offault	Possible cause	Countermeasures
Err.12	Input out-phase	1. Abnormal three-phase output 2. Abnormal driver board 3. Abnormal main controlpanel	1. Check and rule out the fault in peripheral circuit 2. Seek for technical support 3. Seek for technical support
Err.13	Output out-phase	1. Abnormal wiring between inverter and motor 2. Imbalance of three-phase output during the motor operation 3. Abnormal driver board 4. Abnormal main control panel	1. Rule out the fault in peripheral circuit 2. Check whether three-phase winding of motor is normal 3. Seek for technical support 4. Seek for technical support
Err.14	Abnormal temperature of module	1. Ambient temperature too high or below -20℃ 2. Air duct blocked 3. Fan damaged 4. Thermistor damaged or unconnected	1. Decrease ambient temperature or increase it to above -20℃ 2. Clear the air duct 3. Change fan 4. Change thermistor
Err.15	External fault	1. External fault signal through DI or VDI input	1. Check external fault source
Err.16	Communication failure	1. Upper computer fails to work 2. Communication cable is not properly used 3. Communication parameter P13 group is not properly set	1. Check the wiring of upper computer 2. Check the wiring of communication 3. Confirm communication parameter is right
Err.17	Interphase short circuit (U, V and W)	1. Three-phase short circuit at inverter output 2. Interphase short circuit of motor	1. Check three-phase connection of the inverter 2. Check three-phase short circuit of the motor
Err.18	Current detection circuit fault	1. Check Hall device 2. Abnormal driver board	1. Change Hall device 2. Change driver board

Fault code	Type offault	Possible cause	Countermeasures
Err.19	Motor tune fault	1. Motor parameters are not set according to its nameplate 2. Timeout during parameter tuning	1. Set motor parameters according to its nameplate 2. Check the wiring between the inverter and the motor
Err.21	Parameter read and write failures	1. EEPROM chip damaged	1. Change main control panel
Err.22	Parameter download failures	1. Software function code version number is not proper 2. Inverter model is not proper	1. Upload and download the parameters of inverter with proper software function code version number 2. Upload and download the parameters of inverter with proper model
Err.23	Motor short circuit to earth	1. Motor short circuit to earth or insulated wire damaged	1. Change wire or motor
Err.26	Accumulative running time arrives	1. Accumulative running time reaches the set value	1. Clear record information
Err.27	User customized fault 1	1. User customized fault 1 signal through DI or VDI input	1. Check external fault source
Err.28	User customized fault 2	1. User customized fault 2 signal through DI or VDI input	1. Check external fault source
Err.29	Accumulative power-on time arrives	1. Accumulative power-on time reaches the set value	1. Clear record information

Fault code	Type offault	Possible cause	Countermeasures
Err.30	Off-load	1. Running current of inverter lower than P09.23	1. Check whether the load is off or P09.23, P09.24 parameters are set according to actual operational conditions
Err.31	Running PID feedback disconnection	1. PID feedback lower than the set value of P10.25	1. Check whether PID feedback signal or FP10.25 is proper
Err.40	Rapid current-limiting timeout	1. Load too high or motor stalling 2. Too low power of inverter	1. Reduce the load and check the motor and the inverter 2. Select the inverter with greater power
Err.41	Motor switch during operation	1. Current motor selection is changed through terminal during operation	1. Motor switch is carried out after the inverter stops

7. Optional accessories

7.1 External keyboard

The M100 series supports two external keyboard options: dual display keyboard and LCD display keyboard.

Please refer to Fig.7-1 for the dual display external keyboard and its installation bracket:

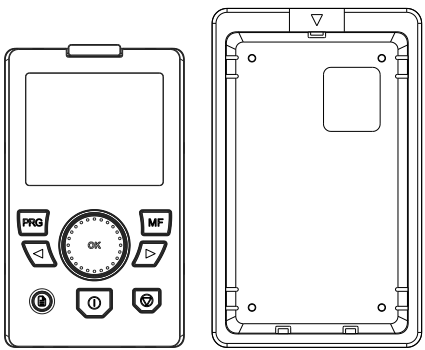

Fig. 7-1 dual display keyboard and Its Installation Bracket

Please refer to Fig. 7-2 for the LCD display external keyboard and its mounting bracket:

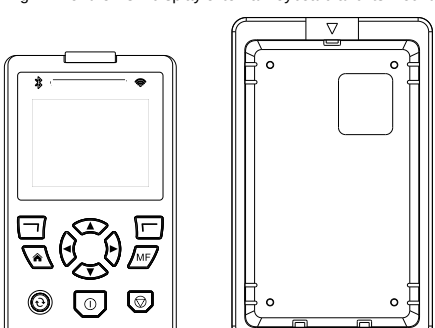

Fig. 7-2 Dual Display Keyboard and Its Installation Bracket

7.2 NEMA Type1 Option

The M100 series offers NEMA Type1 options. The wiring of the shielding layer is shown in Figure 7-6, and for the installation of optional accessories, please refer to Fig. 7-3.

Fig. 7-3: Shielding Layer Wiring (NEMA Type1 Junction Box)

Annex Ⅰ Product specifications

Item		Specifications	
Input	Rated voltage, frequency	2S: 220 ~ 240V，4T: 380 ~ 480V，50/60 Hz	
	Allowable voltage fluctuating range	2S:Fluctuating range 200-253V 4T:Fluctuating range 320-528V; degree of unbalance: <3% Frequency range: 47-63Hz	
Output	Output voltage	0-INPUT	
	Output frequency	0-320 Hz，0-3200Hz	
	Overload capacity	N：150% - 60 s；180% - 3 s；200% - 0.5 s	
Control feature	Control mode	V/F control, SVC	
	Starting torque	0.25Hz 150% (SVC)	
	Range of speed regulation	1:100 (V/F)；1:200 (SVC)	
	Steady speed precision	≤±0.5% (SVC)	
	Speed fluctuation	≤±0.5% (SVC)	
	Torque control accuracy	SVC: ±5% (>=5.00Hz)	
	Torque response	≤20ms (SVC)	
	Frequency precision	Low frequency operation mode	High frequency operation mode
		Digital setting: 0.01Hz Analog setting: maximum frequency ×0.2%	Digital setting: 0.1Hz Analog setting: maximum frequency ×0.2%
	Frequency resolution	0.01Hz	0.1Hz
	Modulation system	SVPWM	
	Carrier frequency	0.5 - 16kHz，modulated based on mode	
	Auto carrier adjustment	When the function is activated, the inverter can automatically adjust carrier frequency based on the temperature inside.	

Item		Specifications
	Torque boost	In V/F control mode, the torque can increase by 0.1% -30% manually.
	Torque curve	0: User customized V/F curve; 1: 2.0 power curve; 2: 1.7 power curve; 3: 1.2 power curve
	Acceleration and deceleration time	0-6500.0s, linear or sigmoid acceleration and deceleration curve mode, optional 4 groups of acceleration and deceleration time
Basic functions	Inching functions	Frequency range: 0.00-50.00 Hz
		Acceleration and deceleration time: 0.1-60.0s
		Optional interval time: 0.0-100.0s
	Simple PLC, multi speeds	Up to 16 speeds can be achieved through built-in PLC function and control terminal functions
	Internal PID	To achieve close-loop control
	Wakeup	Process PID has sleep and wakeup function
	Torque limit	The torque is limited during speed control to prevent frequent over-current alarm
	DC brake	Starting frequency: 0.00- the maximum set frequency
		Time: 0.01 – 30.00s (0.0: not activated)
		Current: 0.0-100.0% inverter rated current
	Auto voltage regulation (AVR)	When input voltage deviates from the rated value, the function can be used to keep output voltage constant, so AVR is activated in general, especially when input voltage is higher than the rated value
	Auto current-limiting	When the input voltage deviates from the rated voltage, the function can be used to regulate the output voltage, so that AVR should be activated under normal circumstance, especially when the input voltage is higher than the rated voltage
	Over-voltage stalling control	Used to control the voltage of DC bus during the running of the inverter to prevent overvoltage of DC bus
	MODBUS communication	Standard MODBUS communication protocol for rapid communication with peripherals

Annex Ⅰ Product specifications

Item		Specifications
Special functions	Binding function	Operation command channel is bound with power input channel, without parameter setting
	Input terminal drain/source section	Through jumper terminal, drain or source can be chosen for DI1- DI5 to meet the needs in different cases
	Multi AI curve correction	Up to 4 points can be chosen to set AI curve for flexible and convenient curve correction
	Double motor parameters	Two sets of parameters of asynchronous inverters are stored to achieve the switching function between two different motors
	Virtual I / O port	5 virtual DI/DO ports make complex logic control applications convenient
	Customer-defined parameter set	The customer can choose the required parameter set, sent to P17 as the custom parameter for daily view and modification
Operation and running	Command source channel	Three modes, keyboard setting, external terminal setting, communication setting, switchable
	Frequency source channel	Digital setting, analog setting, pulse setting, multi-speed, communication setting etc. for selection
	Input termina	5 digital input terminals, DI1-DI5, drain and source input can be chosen
		1 analog input terminals AI1:0 – 10V or 0-20 mA can be chosen: 1 analog input terminals AI both can be used as digital input terminal DI
	Output terminal	1 group programmable switch output, the output level is 24 V when open
		1 group programmable relay output, 250 VAC/3 A 30VDC/ 3A
		1 group analog output terminals, 0-10 V or 0-20 mA can be chosen

Annex Ⅱ Technical parameters

Modle	Size	Braking unit	Rated Capacity (kVA)	Rated intput Current (A)	Rated output Current (A)	Adaptive Motor (kW)
M100-2S00041N-A	A	Built-in	0.9	6	2.5	0.4
M100-2S00071N-A	A	Built-in	1.5	9.5	4	0.75
M100-2S00151N-A	A	Built-in	2.8	14	6.5	1.5
M100-4T00071N-A	A	Built-in	1.7	3.2	2.5	0.75
M100-4T00151N-A	A	Built-in	2.6	5.0	4.0	1.5
M100-4T00221N-A	A	Built-in	3.4	5.8	5.2	2.2
M100-2S00221N-B	B	Built-in	4.1	25	9	2.2
M100-4T00401N-B	B	Built-in	5.9	13	10	4.0
M100-4T00551N-B	B	Built-in	8.6	15	13	5.5

Tips: Models with * are suitable for specific occasions, please consult customer service for specific information.

Annex Ⅲ Installation dimensions

①Installation dimensions of external keyboard

Installation dimensions of dual display external keyboard:

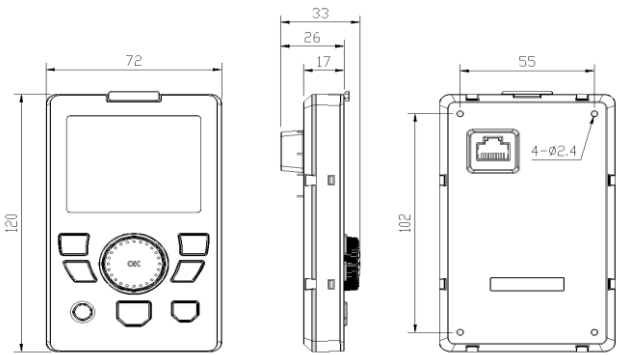

FIg. C-1 Installation Dimensions of Dual Display External Keyboard (mm)

Installation dimensions of LCD display external keyboard:

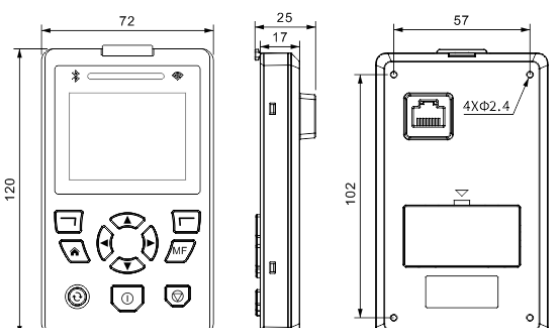

Fig. C-2 Installation Dimensions of LCD Display External Keyboard (mm)

According to actual installation requirements, the dual display external keyboard and the LCD display external keyboard can be installed with a bracket, and the bracket hole size is as follow:

Keyboard bracket B hole size: 78X126mm

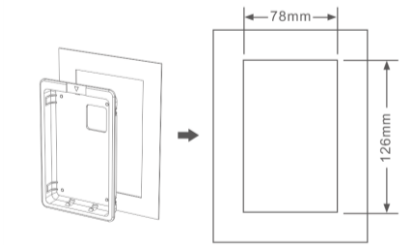

Fig. C-3 Installation dimensions of external keyboard bracket (mm)

Tips：

1. For detailed operating instructions of the dual display keyboard and the LCD display keyboard, please refer to the user manual.

2.M100 series frequency converters allow the connection cable (RJ45 interface) between the external keyboard control end and the frequency converter body to be less than 200m. When operating above this distance, a remote keyboard is required.

②Installation dimension diagram of frequency converte

Frame A/B/ for models: M100-2S0004N-A~ M100-4T00551N-B

As shown in Figure C-4:

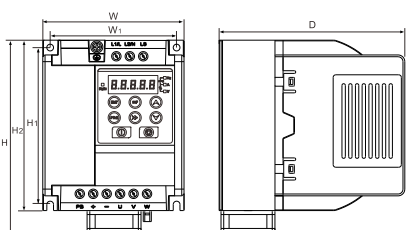

Fig. C-4 Installation Dimensions of Frame A/B

Installation dimension table of frequency converter

Size	Model	Installation size(mm)		Overall dimension(mm)				Screw size	Torque (kgf·cm)
		W1	H1	W	H	H2	D		
A	M100-2S00041N-A M100-2S00071N-A M100-2S00151N-A M100-4T00071N-A M100-4T00151N-A M100-4T00221N-A	94	117	105	148	127	138	M4	15±10%
B	M100-2S00221N-B M100-4T00401N-B M100-4T00551N-B	129	129	140	161	139	148		

Annex Ⅳ Peripherals selection

Model	Air circuit breaker (A)	Electromagnetic contactor(A)	Wire diameter (mm²)
M100-2S00041N-A	6	9	1.5
M100-2S00071N-A	6	9	1.5
M100-2S00151N-A	6	9	1.5
M100-4T00071N-A	6	9	1.5
M100-4T00151N-A	10	9	1.5
M100-4T00221N-A	10	9	1.5
M100-2T00221N-B	10	9	1.5
M100-4T00401N-B	20	20	2.5
M100-4T00551N-B	32	25	4

Annex Ⅴ Braking resistor selection

When the inverter has the motor reverse or decelerate and stop, the voltage of DC bus will increase due to the energy feedback of the motor. In order to prevent the inverter from stopping due to over-voltage protection, the inverter automatically switches on energy consumption braking circuit before the voltage of DC bus reaches the protection point, so that the excess energy is released in the form of thermal energy through brake resistor, thereby inhibiting the continuous increase of voltage and ensuring the normal operation of the inverter.

① Resistance selection for brake resistor

When braking, the energy generated by the motor is almost entirely consumed by the brake resistor.

The formula: U×U/R=Pb

U—Braking voltage for stable braking (the voltage varies based on different system, 700V for 380 VAC system)

Pb—braking power

② Power selection for brake resistor

The oretically, the power of brake resistor is same as brake power, but in practice, the brake resistor is derated for use.

The formula: λ×Pr = Pb×ED%

λ—Derating factor, generally 70%

Pr—power of braking resistor

ED%—brake utilization rate (the proportion of energy regeneration process to the whole process), generally 10%.

Please refer to the table below:

Load type	Elevator	Winding, unwinding	Centrifuge	Occasional brake load	General case
Brake utilization rate	20%~30%	20%~30%	50%~60%	5%	10%

③Brake resistor selection

Model	Power of brake resistor (kW)	Resistance of brake resistor(Ω)	Braking unit
M100-2S00041N-A	≥ 0.23	≥ 350	Built-in
M100-2S00071N-A	≥ 0.23	≥ 350	
M100-2S00151N-A	≥ 0.24	≥ 328	
M100-4T00071N-A	≥ 0.23	≥ 350	
M100-4T00151N-A	≥ 0.24	≥ 328	
M100-4T00221N-A	≥ 0.33	≥ 224	
M100-2T00221N-B	≥ 0.33	≥ 224	
M100-4T00401N-B	≥ 0.60	≥ 123	
M100-4T00551N-B	≥ 0.83	≥ 90	

Annex VI MODBUS protocol description

①Expression rules for function code parameter address

Parameter address is expressed with function code group number and code number:

High byte: 00 ~ FF

Low byte: 00 ~ FF

For example:

To access the function code P03.12, the function code access address is expressed as 0x030C

Note:

P07 Group: P07.11: write-only, P07.06: read-only, P07.07 and P07.02: neither readable nor writeable, other function codes are written and read according to their property.

P30 Group: Only readable, parameters cannot be changed.

Some parameters cannot be changed while the inverter is running; some parameters cannot be changed regardless of the status of the inverter; the function code parameters can be changed based on the range, unit and related description.

Note:

Function code	Communication access address	Function code address in communication change RAM
P00-P17 group	0x0000-0x111D	0x8000-0x911D
P19 group	0x1300-0x1308	0x9300-0x9308
P30 group	0x1E00-0x1E3B	

If the permanent save is not needed, the parameter value can be written in the RAM area. otherwise, the parameter value is written in the EEPROM area. Frequently writing the parameter value in the EEPROM area will reduce its service life. To achieve this function, the highest order digital is changed from 0 to 1 for the function code address to achieve the function.

For example:

Function code P03.12 is not stored in the EEPROM area, so its address is expressed as 0x830C;

The address indicates that it is only written as RAM, cannot be read, if you try to read, it is an invalid address.

②Other features address description

Feature description	Parameter address	Parameter description	R/W
Stop/start parameter	D100H	*communication set value (decimal) (-10000-10000)	R/W
	D101H	Run frequency	R
	D102H	Bus voltage	
	D103H	Output voltage	
	D104H	Output current	
	D105H	Output power	
	D106H	Output torque	
	D107H	Output speed	
	D108H	DI input signal	
	D10AH	AI1 voltage	
	D10CH	Loading speed	
	D10DH	PID setting	
	D10EH	PID feedback	
	D10FH	PLC step	
	D110H	Feedback speed, unit: 0.1Hz	
	D111H	Remaining running time	
	D112H	AI1 voltage before correction	
	D114H	Linear speed	
	D115H	Current power-on time	
	D116H	Current running time	
	D117H	Communication set value	
	D118H	Main frequency X display	
	D119H	Auxiliary frequency Y display	
	D11BH	DO output signal	
	D11CH	Count value	
	D11DH	Motor speed	
	D11EH	Output torque (relative to the rated torque of the inverter)	

Feature description	Parameter address	Parameter description		R/W
Communication command control	D200H	0001: run forward 0002: run reverse 0003: inch forward 0004: inch reverse 0005: free stop 0006: decelerating stop 0007: fault reset 0008: tuning start		W
Digital output terminal control	D201H	BIT1: RELAY1 output control BIT3: VDO1 BIT4: VDO2 BIT5: VDO3 BIT6: VDO4 BIT7: VDO5		W
Analog output AO1 control	D202H	0-7FFFF, indicating 0%-100%		W
Invert state control	D300H	0001: run forward 0002: run reverse 0003: stop		R
Inverter fault description	D400H	0000: no fault 0001: brake VCE fault 0002: acceleration over-current 0003: deceleration over-current 0004: constant speed over-current 0005: acceleration over-voltage 0006: deceleration over-voltage 0007 constant speed	0012: current detection fault 0013: motor tuning fault 0015: parameter read and write fault 0016: parameter download fault 0017: motor short circuit to earth 0019: Trial run time arrives 001A: running time arrive 001B: user customized fault 1	R

Feature description	Parameter address	Parameter description	R/W	Feature description
Inverter fault description	D400H	over-voltage 0008: reserved 0009: under-voltage fault 000A: inverter overload 000B: motor overload 000C: input out-phase 000D: output out-phase 000E: module overheat 000F: external fault 0010: communication fault 0011: interphase short circuit	001C: user customized fault 2 001D: power-on time arrive 001E: off-load 001F: PID feedback disconnection during operation 0028: rapid current-limiting timeout fault 0029: motor switch fault during operation 002A:Speed deviation is too large 002B:Motor overspeed	R
Parameter lock password check	070BH	Enter passwords("8888H" if the passwords are right)		W
Communication fault	DD88H	0000: no fault 0001: wrong passwords 0002: wrong command code 0003: wrong CRC correction 0004: invalid address	0005: invalid parameter 0006: invalid parameter change 0007: locked system 0008: EEPROM is being operated 0009: The number of multi-byte write parameters is wrong	R

*** Note:**

●The communication set value is a percentage of the relative value, 10000 corresponds to

100.00%, - 10000 corresponds to -100.00%; for a frequency, the percentage is a

percentage to the maximum frequency (P00.10); for a torque, the percentage is P03.10, P15.21 (the upper torque limits correspond to motor 1 and motor 2, respectively);

● R/W indicates the read / write property of the function code.

③Read and write operation description

1、 Read command 03H: command code 03H, read N words, up to 12 words.

For example:

The preset frequency of the inverter is read with the address 01H, its function code is P00.08, the function code address is 0008H, the preset frequency is assumed as 50Hz here.

The command information sent by the host:

Inverter address	Read command	Function code address	Number of data	CRC check
01	03	00 08	00 01	05 C8

The command information sent by the slave:

☑ If correct, the command information sent by the slave:

When P13.05 is set as 0				
Inverter address	Read command	Number of data	Data content	CRC check
01	03	00 02	13 88	E9 5C
When P13.05 is set as 1				
Inverter address	Read command	Number of data	Data content	CRC check
01	03	02	13 88	B5 12

☒If error, the command information sent by the slave:

Inverter address	Read command	Communication fault address	Communication fault code	CRC check
01	03	DD 88	XX XX	XX XX

2、 Command 06H: command code 06H, write a word.

For example:

The preset frequency of the inverter is read with the address 01H, its function code is P00.08, the function code address is 0008H, the preset frequency is assumed as 50Hz here.

The preset frequency of inverter with address of 01H is set as 50Hz, its function code is

P00.08, the function code address is 0008H. From the view of decimal point, the ratio of the preset frequency to site bus is 100, so 50Hz is multiplied by the above ratio 100, the result 5000 corresponds to hexadecimal 1388H, which should be written in.

Command information sent by the host for which EEPROM is written in:

Inverter address	Write command	Function code address	Data content	CRC check
01	06	00 08	13 88	05 5E

☑f correct, the command information sent by the slave:

Inverter address	Write command	Function code address	Data content	CRC check
01	06	00 08	13 88	05 5E

If the write operation is completed, the command information sent by the slave is the same as that sent by the host.

☒If error, the command information sent by the slave:

Inverter address	Write command	Communication fault address	Communication fault code	CRC check
01	06	DD 88	XX XX	XX XX

Command information sent by the host for which RAM is written in:

Inverter address	Write command	Function code address	Data content	CRC check
01	06	80 08	13 88	2C 9E

☑If correct, the command information sent by the slave:

Inverter address	Write command	Function code address	Data content	CRC check
01	06	80 08	13 88	2C 9E

If the write operation is completed, the command information sent by the slave is the same as that sent by the host.

☒If error, the command information sent by the slave:

Inverter address	Write command	Communication fault address	Communication fault code	CRC check
01	06	DD 88	XX XX	XX XX

Note:

You should pay attention to during operation that frequently writing the parameter value in the EEPROM area will reduce its service life.

3、 Multi byte write instruction 10H: Command code 10H. Continuously writes multiple words, up to a maximum of 12 words.

For example:

Set the function codes P11.00~P11.03 of the inverter with address 01H to 10.0%, 25.0%, 50.0%, and 100.0%, respectively. The function code address corresponding to P11.00 is 0B00H.

The command information sent by the EEPROM host is written in:

Inverter address	Write command of multi byte	Function code address	Number of data	Byte quantity
01	10	0B 00	00 04	08
Data Content	Data Content	Data Content	Data Content	CRC check
00 64	00 FA	01 F4	03 E8	11 93

☑ If correct, the response command information from the slave is:

Inverter address	Write command of multi byte	Function code address	Number of data	CRC check
01	10	0B 00	00 04	C3 EE

If the write operation is successful, the response command information is the same as the first six bytes of the sent command information.

☒If error, the response command information from the slave is:

Inverter address	Write command of multi byte	Function code address	Communication fault code	CRC check
01	10	DD 88	XX XX	XX XX

The command information sent by the RAM host is written in:

Inverter address	Write command of multi byte	Function code address	Number of dat	Byte quantity
01	10	8B 00	00 04	08

Data Content	Data Content	Data Content	Data Content	CRC Check
00 64	00 FA	01 F4	03 E8	EE 52

☑ If correct, the response command information from the slave is:

Inverter address	Write command of multi byte	Function code address	Data Content	CRC Check
01	10	8B 00	00 04	EA 2E

☒If error, the response command information from the slave is:

Inverter address	Write command of multi byte	Communication fault address	Communication fault code	CRC Check
01	10	DD 88	XX XX	XX XX

Tips:

Due to frequent storage of EEPROM, its lifespan will be reduced. Please pay attention during operation!

Warranty terms

Our Company solemnly promises that the user enjoys the following after-sales warranty service from the date when he purchases our product:

Ⅰ、Free warranty within 18 months after the user purchases our product (except for exported product and non-standard products).。

Ⅱ、Free return, replacement and repair if quality problems happen within one month after the user purchases our product

Ⅲ、Free replacement and repair if quality problems happen within three months after the user purchases our product

Ⅳ、Lifetime paid service after the user purchases our product.

Ⅴ、Exception clause: 18-month warranty does not apply to any damage or fault caused by:

1）not following the user manual or the standard specifications

2）earthquakes, fires, floods, abnormal voltage, other accidence beyond control

3）incorrect use or unauthorized disassembly, repair, transformation

4）using for non-normal function of the product

5）Improper storage.

Ⅵ、In the following circumstances, our company has the right to refuse to provide warranty service:

1）Information about the product (nameplate, label, serial number, etc.) cannot be identified

2）The user has not paid the purchase price according to the contract signed between the user and our company

3）The user intentionally conceals misuse during the installation, wiring, operation and maintenance etc. from our after-sales personnel

HuaYuan Electric Co., Ltd.

Address: Building 2, No.6 Songjiang Road, Songgang Street, Bao'an District, Shenzhen

Post code: 518000

Tel: +86 755 2350 5589

Fax:+86 755 2350 5661

Website: www.huayuan-elec.com

E-mail: sales@huayuan-elec.com

Warranty card

Customer Information	Name of working unit:	
	Address of working unit:	
	Contact:	Tel.:
	Fax:	Post code:
Product information	Model:	Barcode:
	Purchase date:	Date of fault:
	Motor power:	Application site:
	Name of agent:	
Fault information	(Repair time and content) After-sales personnel: Date:	